SAS Disk Shelves

Universal SAS and ACP Cabling Guide

April 2016 | 215-05500_F0
doccomments@netapp.com

NetApp®

Contents

SAS cabling rules 5
Configuration rules 5
Controller slot numbering rules 6
Shelf-to-shelf SAS connection rules 6
Controller-to-stack SAS connection rules 7
SAS optical cable rules 10
Cabling disk shelves in a new HA pair or single-controller configuration 12
Requirements for cabling disk shelves in a new HA pair or single-controller configuration 12
Considerations for cabling disk shelves in a new HA pair or single-controller configuration 13
Cabling the disk shelves in a new HA pair or single-controller configuration 13
SAS port pair worksheet and cabling examples for common configurations 17
Port pair worksheet and cabling examples for multipath HA configurations with quad-port SAS HBAs 18
Port pair worksheet and cabling examples for single-controller-dual-path configurations with quad-port SAS HBAs 26
Port pair worksheet and cabling examples for 32xx and 8020 configurations 30
Port pair worksheet and cabling examples for 80xx configurations with four onboard SAS ports 34
Port pair worksheet and cabling examples for PCM configurations 38
Port pair worksheet and cabling examples for FAS2050 configurations 43
Port pair worksheet and cabling examples for FAS2040 configurations 47
SAS port pair worksheet template 50
How to read a port pair worksheet to cable controller-to-stack connections 52
ACP cabling rules 54
ACP cabling 56
Cabling ACP in an HA pair or single-controller configuration with external SAS storage 56
Cabling ACP on PCM systems with no external SAS storage 61
ACP cabling examples 62
Examples of ACP cabling for HA pairs 62
Examples of ACP cabling for single-controller configurations 64
ACP cabling examples for all single-controller configurations except FAS20xx systems 65
ACP cabling examples for single-controller FAS20xx systems 66
Glossary 69
Document update record 71

Copyright information **74**
Trademark information **75**
How to send comments about documentation and receive update notifications **76**
Index **77**

SAS cabling rules

You can cable SAS disk shelves to an HA pair or single-controller configuration that meets the controller slot numbering rules, configuration rules, shelf-to-shelf SAS connection rules, controller-to-stack connection rules, and if applicable, SAS optical cable rules.

The SAS cabling rules described in this guide balance SAS cabling between the on-board SAS ports and host bus adapter SAS ports to provide highly available storage controller configurations and meet the following goals:

- Provide a single, easily understood universal algorithm for all SAS products and configurations
- Yield the same physical cabling when generating the Bill of Materials (BOM), followed in the factory, and in the field
- Are verifiable by configuration-checking software and tools
- Provide maximum possible resilience to maintain availability and minimize the reliance on controller takeovers

You should avoid deviating from the rules; deviations might reduce reliability, universality, and commonality.

Configuration rules

If you want to use SAS disk shelves, your HA pair or single-controller configuration must be cabled as multipath HA, dual-path (multipath), single-path HA or single-path as defined by the configuration rules.

- All HA pair configurations must use multipath HA, with the following exceptions:
  - FAS2040 systems use single-path HA.
  - FAS22xx and FAS25xx systems with no external SAS storage can use single-path HA, which requires no external cabling.
    However, the recommended configuration is to enable multipath HA for the internal disks by connecting the SAS ports of one controller module to the SAS ports of the partner.

    Note: A multipath HA configuration having external shelves requires two ports on each controller for each stack of disk shelves. Even if the stack consists of one disk shelf, two ports on each controller are required.
- All single-controller configurations must use dual-path (multipath), with the following exceptions:
  - FAS2040 systems use single-path.
  - FAS22xx and FAS25xx systems have the internal disks cabled as single-path, but the system can use either single-path or dual-path connectivity to the external shelves; both are supported.
    Dual-path provides greater resiliency, but when dual-path is used, Data ONTAP 8.1.x issues occasional warnings to the console because mixed paths are detected. To avoid the warnings, single-path connections to the external SAS storage are a supported option in these configurations.

Controller slot numbering rules

For the purpose of applying cabling rules across all HA pairs and single-controller configurations, a controller slot numbering convention is used.

- For all HA pairs and single-controller configurations except FAS2040 configurations, the following applies:
  - A SAS HBA in a physical PCI slot is defined as occupying PCI slot 1, 2, 3, and so on regardless of the slot's physically label on a controller.
    For example, if SAS HBAs occupied physical PCI slots 13, 7, and 5, they would be designated as slots 1, 2, and 3 for the purpose of applying the SAS cabling rules.
  - An onboard SAS HBA is defined as occupying PCI slot 0 just as it is labeled on a controller.
  - Each port in each slot is defined just as it is labeled on a controller.

  For example, slot 0 with two ports is referred to as 0a and 0b. Slot 1 with four ports is referred to as 1a, 1b, 1c, and 1d.
  In this document, slots 0,1, 2, 3 and so on, and the slot ports are depicted as follows:

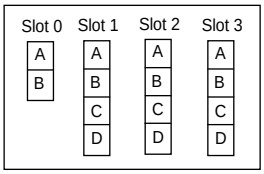

- For FAS2040 configurations, the onboard SAS port is treated as slot 0 port a.
  This port is labeled as 0d on a controller.
  In this document, the FAS2040 onboard SAS port is depicted as follows:

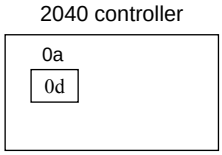

Shelf-to-shelf SAS connection rules

When you have more than one disk shelf in a stack of disk shelves, you need to know how they connect to each other through each SAS domain for redundancy.

- Disk shelves are connected to each other through each SAS domain—domain A (IOM A) and domain B (IOM B)—by cabling the SAS ports circle-to-square:
  - Domain A connections: each disk shelf's IOM A circle port is connected to the next shelf's IOM A square port.
  - Domain B connections: each disk shelf's IOM B circle port is connected to the next shelf's IOM B square port.
  - Circle ports are always cabled to square ports.
    Never cable circle ports to circle ports or square ports to square ports.

The following illustration shows a cabled stack of disk shelves with the IOMs arranged side-by-side, similar to how a DS2246 disk shelf is oriented:

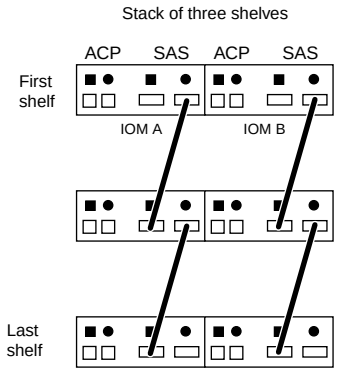

The following illustration shows a cabled stack of disk shelves with the IOMs arranged one above the other, similar to how a DS4246 or DS4243 disk shelf is oriented:

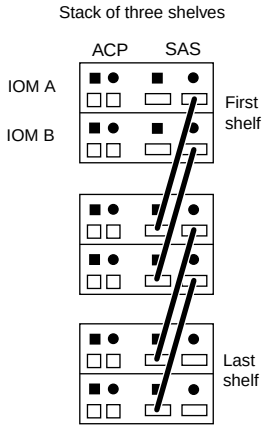

Controller-to-stack SAS connection rules

You can correctly cable the SAS connections for each controller in an HA pair or in a single-controller configuration to each stack in your system by understanding that SAS disk shelves use software-based disk ownership, how controller ports A/C and B/D are connected to stacks, and how controller ports A/C and B/D are organized into port pairs.

SAS disk shelf software-based disk ownership rule

SAS disk shelves use software-based disk ownership (not hardware-based disk ownership). This means that disk drive ownership is stored on the disk drive rather than it being determined by the topology of the storage system's physical connections (as it is for hardware-based disk ownership).

Specifically, disk drive ownership is assigned by Data ONTAP (automatically or by CLI commands), not by how you cable the controller-to-stack connections.

SAS disk shelves should never be cabled using the hardware-based disk ownership scheme.

Controller A and C port connection rules

- A and C ports always connect to the first disk shelf in a stack.
- A and C ports always connect to square ports.
- Controller 1 A and C ports always connect to IOM A (domain A).
- Controller 2 A and C ports always connect to IOM B (domain B).

Note: For PCM configurations, it is especially important to follow the rules regarding controller 1 (PCM1) and controller 2 (PCM2) connections because you must have same-domain connectivity between the PCM 0a port (the embedded storage) and the stack of disk shelves it is connected to.

For example, a PCM located in slot A of the chassis (PCM1) is in domain A (IOM A); therefore, its 0a port must connect to domain A (IOM A) in the stack. A PCM located in slot B of the chassis (PCM2) is in domain B (IOM B); therefore, its port 0a must connect to domain B (IOM B) in the stack.

By following the rules, you avoid cross-connecting domains, which exposes your system to resiliency issues that prevent you from performing nondisruptive procedures safely.

The following illustration shows how controller ports A and C connect in a multipath HA configuration with one quad-port HBA and two stacks of disk shelves. The port pairs defined for the configuration are 1a/1d and 1c/1b. The illustration shows the IOMs arranged one above the other, similar to how a DS4246 or DS4243 disk shelf is arranged.

For cabling examples of other multipath HA and single-controller configurations, see the “SAS port pair worksheet and cabling examples for common configurations” section.

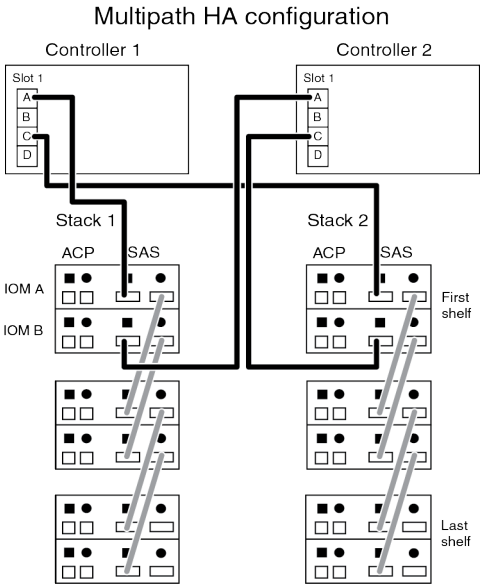

Controller B and D port connection rules

- B and D ports always connect to the last disk shelf in a stack.

- B and D ports always connect to circle ports.
- Controller 1 B and D ports always connect to IOM B (domain B).
- Controller 2 B and D ports always connect to IOM A (domain A).
- B and D ports are connected to the stacks by offsetting the order of the PCI slots by one so that the first port on the first slot is cabled last.

The following illustration shows how controller ports B and D connect in a multipath HA configuration with one quad-port HBA and two stacks of disk shelves. The port pairs defined for the configuration are 1a/1d and1c/1b. The illustration shows the IOMs arranged one above the other, similar to how a DS4246 or DS4243 disk shelf is arranged.

For cabling examples of other multipath HA and single-controller configurations, see the “SAS port pair worksheet and cabling examples for common configurations” section.

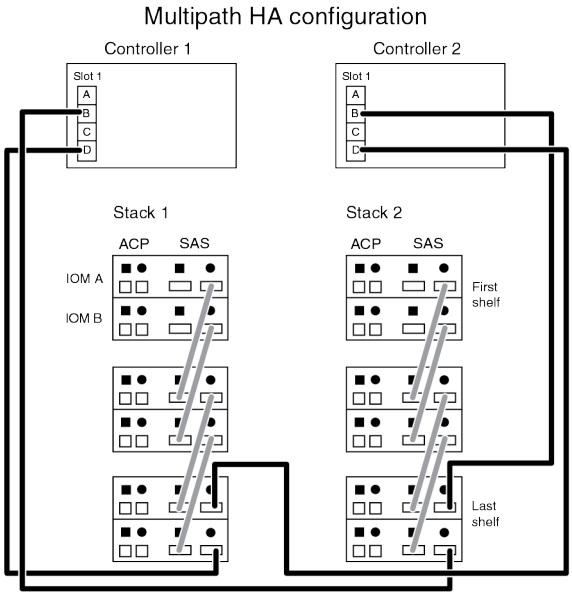

Port pair connection rules

You cable each controller in an HA pair or in a single-controller configuration to the first and last disk shelf in a stack by identifying the controller A/C and B/D ports, and organizing them into port pairs.

Note: Embedded storage platforms in single-path HA or single-path single-controller configurations do not have connections to the last shelf in the stack.

- A port pair consists of an A or C SAS port, which connects to the first shelf in a stack and a B or D SAS port, which connects to the last shelf in a stack.

  For example, 1a/1d (slot 1 port a/slot 1 port d) is a port pair.

  Controller SAS ports can be a combination of SAS HBA ports in a physical PCI slot (slot 1-N) or on board the controller.

- Port pairs are defined as follows:
  - Listing A ports and then C ports in sequence of slots (0,1, 2, 3, etc.), for example: 1a, 2a, 3a, 1c, 2c, 3c
  - Listing B ports and then D ports in sequence of slots (0,1, 2, 3, etc.), for example: 1b, 2b, 3b, 1d, 2d, 3d

- Rewriting the D and B port list so that the first port in the list is moved to the end of the list, for example:

  ~~1b~~, 2b, 3b, 1d, 2d, 3d, **1b**

- Pairing the A and C ports to the D and B ports in the order that you listed them (sequentially), for example:

  1a/2b, 2a/3b, 3a/1d, 1c/2d, 2c/3d, 3c/1b

- The default standard for connecting controller port pairs to the stacks is in sequential order (as shown in the previous bullet).

  You have the option to not use port pairs in sequence, meaning that you can skip port pairs.

  For example, if you skipped port pairs using the list in the previous bullet, the order would be 1a/2b, 3a/1d, 2c/3d. Later, if you were to add more stacks, you would use the port pairs you had skipped (2a/3b, 1c/2d, 3c/1b).

The section “SAS port pair worksheet and cabling examples for common configurations” shows port pairs cabled in sequence and port pairs being skipped.

SAS optical cable rules

You can use SAS optical cables when your HA pair or single-controller configuration meets the SAS optical cable rules.

- Your platform, disk shelves, and version of Data ONTAP must support the use of SAS optical cables.

  NetApp Hardware Universe

- The SAS cables can be SAS copper, SAS optical, or a mix depending on whether or not your system meets the requirements for using the type of cable.

  If you are using a mix of SAS copper cables and SAS optical cables, the following rules apply:

  - Shelf-to-shelf connections in a stack must be all SAS copper cables or all SAS optical cables.
  - If the shelf-to-shelf connections are SAS optical cables, the shelf-to-controller connections to that stack must also be SAS optical cables.
  - If the shelf-to-shelf connections are SAS copper cables, the shelf-to-controller connections to that stack can be SAS optical cables or SAS copper cables.

- SAS optical multimode QSFP-to-QSFP cables can be used for controller-to-shelf and shelf-to-shelf connections, and are available in lengths up to 50 meters.

- If you are using SAS optical multimode MPO cables with MPO QSFP modules, the following rules apply:

  - You can use these cables for controller-to-shelf and shelf-to-shelf connections.
  - The length of a single cable cannot exceed 150 meters for OM4 and 100 meters for OM3.
  - The total end-to-end path (sum of point-to-point paths from the controller to the last shelf) cannot exceed 510 meters.

    The total path includes the set of breakout cables, patch panels, and inter-panel cables.

- If you are using SAS optical multimode breakout cables, the following rules apply:

  - You can use these cables for controller-to-shelf and shelf-to-shelf connections.

    If you use multimode breakout cables for a shelf-to-shelf connection, you can only use it once within a stack of disk shelves. You must use SAS optical multimode QSFP-to-QSFP or MPO cables with MPO QSFP modules to connect the remaining shelf-to-shelf connections.

- The point-to-point (QSFP-to-QSFP) path of any multimode cable cannot exceed 150 meters for OM4 and 100 meters for OM3.
  The path includes the set of breakout cables, patch panels, and inter-panel cables.
- The total end-to-end path (sum of point-to-point paths from the controller to the last shelf) cannot exceed 510 meters.
  The total path includes the set of breakout cables, patch panels, and inter-panel cables.
- Up to one pair of patch panels can be used in a path.
- You need to supply the patch panels and inter-panel cables.
  The inter-panel cables must be the same mode as the SAS optical breakout cable: multimode.
- You received a set of QSFP-to-MPO cable modules with each set of SAS optical breakout cables, which you must attach to the MPO end of each SAS optical breakout cable.
  The breakout cables have SC, LC, or MTRJ connectors on the opposite end, which connect to a patch panel.
- You must connect all eight (four pairs) of the SC, LC, or MTRJ breakout connectors to the patch panel.

Cabling disk shelves in a new HA pair or single-controller configuration

Cabling disk shelves (for external storage) in a new HA pair or single-controller configuration includes cabling SAS and ACP connections.

Requirements for cabling disk shelves in a new HA pair or single-controller configuration

Before cabling disk shelves in a new HA pair or single-controller configuration, your system must meet certain requirements.

- Your HA pair must not be a MetroCluster configuration with SAS disk shelves.
  Use the appropriate MetroCluster document to install your new MetroCluster configuration.
  Configuring a stretch MetroCluster system with SAS disk shelves and SAS optical cables in 7-mode
  Configuring a MetroCluster system with SAS disk shelves and FibreBridge 6500N bridges in 7-Mode
  Clustered Data ONTAP 8.3 MetroCluster Installation and Configuration Guide
- Your HA pair or single-controller configuration must have external storage.
  For FAS22xx and FAS25xx configurations in HA pairs with no external storage, see the “PCM multipath HA with no external disk shelves” section.
- Your HA pair or single-controller configuration must have met the supported configuration requirements, including supported disk shelves, SAS cables, number of stacks, and number of disk shelves in a stack.
  NetApp Hardware Universe
- Your platform and disk shelves must already be installed in a rack if the system was not shipped in a system cabinet.
  Platform installation instructions are in the *Installation and Setup Instructions* document that came with your platform. Disk shelf installation instructions are in the *DS4243, DS2246, DS4486, and DS4246 Disk Shelf Installation and Service Guide*.

  Note: Your disk shelves and controllers must not be powered on at this time.

  SAS Disk Shelves Installation and Service Guide for DS4243, DS2246, DS4486, and DS4246
- If you are using PCIe SAS HBAs, they must already be installed and available for cabling the disk shelves.
- Your HA pair or single-controller configuration must have met the configuration rules in the “Configuration rules” section.
- If you are using SAS optical cables, you must have met the rules in the “SAS optical cable rules” section.

Considerations for cabling disk shelves in a new HA pair or single-controller configuration

Before cabling disk shelves in a new HA pair or single-controller configuration, familiarize yourself with information about handling cables and validating the SAS cabling.

- Do not force a connector into a port.
  The SAS cable connectors are keyed; when oriented correctly into a SAS port, the connector clicks into place and the disk shelf SAS port LNK LED illuminates green. For disk shelves, you insert a SAS cable connector with the pull tab oriented down (on the underside of the connector).
  For controllers, the orientation of SAS ports can vary depending on the platform model; therefore, the correct orientation of the SAS cable connector varies.
- Alternate Control Path (ACP) is supported up to 100 meters, the maximum length Ethernet cable.
  You use CAT6 Ethernet cables, which can be non-NetApp cables.
- You can verify cabling by running the `sas expander_map` command in Maintenance mode or by downloading and running Config Advisor.
  Config Advisor is an automated tool that provides correct validation of the SAS cabling. Using the `sas expander_map` command requires you to manually check the output to validate the cabling.
  NetApp Downloads: Config Advisor
- To prevent degraded performance, do not twist, fold, pinch, or step on the cables.
  Cables have a minimum bend radius. Cable manufacturer specifications define the minimum bend radius; however, a general guideline for minimum bend radius is 10 times the cable diameter.
- Using Velcro wraps instead of tie-wraps to bundle and secure system cables allows for easier cable adjustments.

Cabling the disk shelves in a new HA pair or single-controller configuration

When you cable disk shelves for external storage, you must identify the controller port pairs, cable the SAS connections, cable the ACP connections if needed, and power on the disk shelves. You must also verify the shelf IDs, power on the controllers, verify the cabling, verify the shelf firmware, and assign disk ownership, if needed.

Steps

1. Check the section “SAS port pair worksheet and cabling examples for common configurations” to see whether a completed worksheet exists for your configuration.
   a. The next step depends on whether a completed port pair worksheet exists for your configuration:

If...	Then...
There is a completed worksheet for your configuration	Go to the next step. You use the existing completed worksheet instead of filling one out.

If...	Then...
There is no completed worksheet for your configuration	Go to the section “SAS port pair worksheet template”. You need to fill out a worksheet for your configuration.

2. Cable the shelf-to-shelf SAS connections within each stack if you have more than one disk shelf in a stack; otherwise, go to the next step:

   a. From the first shelf to the last shelf in the stack, connect IOM A circle port to the next shelf's IOM A square port.

   b. From the first shelf to the last shelf in the stack, connect IOM B circle port to the next shelf's IOM B square port.

   c. Repeat substeps a and b for each stack.

   For a detailed explanation and illustrations of shelf-to-shelf cabling, see the section “SAS shelf-to-shelf connection rules”.

3. Cable the controller port pairs to the stacks using the completed worksheet.

   Sets of port pairs can be used in sequence or you can skip port pairs.

   For detailed instructions about how to apply a completed worksheet to cable the stacks, see the section, “How to read a port pair worksheet to cable controller-to-stack connections”.

4. If you are using the ACP capability, go to “ACP cabling” to cable the ACP connections, and then proceed to the next step; otherwise, go directly to the next step.

5. Connect the power supplies for each disk shelf and power them on:

   a. Connect the power cords first to the disk shelves, securing them in place with the power cord retainer, and then to different power sources for resiliency.

      Note: If you have a disk shelf with four power supplies, connect power supplies in slots 1 and 3 to one power source and power supplies in slots 2 and 4 to a different power source. Disk shelves have a “slot map” label on the back showing the power supply slots.

   b. Turn on the power supplies for each disk shelf and wait for the disk drives to spin up.

      Note: When the disk shelf has the maximum number of supported power supplies, all disk drives or carriers spin up at the same time. However, if one or two power supplies have faulted in a disk shelf with four power supplies or if one power supply has faulted in a disk shelf with two power supplies, disk drives spin up in sets of six at 12-second intervals.

6. Visually inspect the shelf IDs to verify that the factory-set IDs are unique to each disk shelf in the entire system.

   If you need to change a shelf ID and you need the procedure, see the *DS4243, DS2246, DS4486, and DS4246 Disk Shelf Installation and Service Guide*.

   SAS Disk Shelves Installation and Service Guide for DS4243, DS2246, DS4486, and DS4246

   Note: Changing a shelf ID requires you to power-cycle the disk shelf to make sure that the shelf ID takes effect.

7. Power on the controllers.

   The platform *Installation and Setup Instructions* that came with your platform has system setup and configuration information.

   When you power on the controllers, you have the option to boot into Maintenance mode to validate the cabling using the **`sas expander_map`** command:

a. If you are running System Setup software, halt both nodes; otherwise go directly to the next substep.

b. Boot into Maintenance mode.

i. Boot the system by entering the `boot_ontap` command.

ii. Halt the boot process by pressing `Ctrl-C`.

iii. Select the Maintenance mode option from the display menu.

c. Enter the applicable command at the prompt of either controller:

- For Data ONTAP operating in 7-Mode, enter the following command at the system console:

  `sasadmin expander_map`

- For clustered systems, enter the following command at the clustershell prompt:

  `run -node` *`node_name`* `-command "sasadmin expander_map"`

The output shows information about SAS expanders attached to SAS channels on the controllers. For example, the following output shows the shelf number one expander in Slot A is connected to channel 4a on the controller:

```
Expanders on channel 4a:
Level 3: WWN 500a0980000840ff, ID 1, Serial Number ' SHU0954292G114C',
Product 'DS424IOM6 ', Rev '0151', Slot A
```

d. Verify that all IOMs are shown in the output:

If...	Then...
The output shows all IOMs	Go to the next substep. The IOMs have connectivity.
One or more IOMs are not shown (either the output does not show an IOM because it is cabled incorrectly, or the output does not show all the IOMs downstream from the incorrectly cabled IOM)	**i.** Repeat Step *3* to correct any cabling errors. **ii.** Repeat Step *7.c* to verify you corrected any cabling errors. **iii.** Go to the next step.

e. Exit Maintenance mode by entering the `halt` command.

f. Boot the system by entering the `boot_ontap` command from the boot loader prompt.

8. Download and run Config Advisor.

NetApp Downloads: Config Advisor

9. Verify that all disk shelves in the HA pair or single-controller configuration have the latest version of disk shelf firmware; otherwise, go to the next step.

Note: You should always have the latest version of shelf firmware.

a. Enter the applicable command for disk shelf firmware information:

- For Data ONTAP operating in 7-Mode, enter the following command at the system console:

  `sasadmin expander_map`

  For HA pairs, you can run this command on either controller.

- For clustered systems, enter the following command at the clustershell prompt:

  `run -node node_name -command “sasadmin expander_map”`

b. Locate the disk shelf firmware information for the disk shelves in the output.

Example

0151 is the disk shelf firmware version for shelf number one (Slot A/IOM A) in the storage system:

```
Expanders on channel 4a:
Level 3: WWN 500a0980000840ff, ID 1, Serial Number ' SHU0954292G114C',
Product 'DS424IOM6 ', Rev '0151', Slot A
```

c. Compare the firmware information in the command output with the disk shelf firmware information on the NetApp Support Site to determine the most current disk shelf firmware version.

NetApp Downloads: Disk Shelf Firmware

d. Update the disk shelf firmware if needed:

If the firmware version in the command output is...	Then...
The same or later than the most current version on the NetApp Support Site	Go to the next step. No disk shelf firmware update is needed.
An earlier version than the most current version on the NetApp Support Site	Download the disk shelf firmware file by using the procedure on the NetApp Support Site. *NetApp Downloads: Disk Shelf Firmware* **Note:** For an HA pair, you can run the commands from either controller.

10. Assign disk ownership if your system does not have disk autoassignment enabled.

If you have disk autoassignment enabled, disk ownership was assigned when you powered on the controllers.

a. Enter the applicable command to see whether disk autoassignment is enabled.

If you have an HA pair, you can enter the applicable command at the console of either controller.

If your system is operating in....	Then enter...
7-Mode	**`options disk.auto_assign`**
Clustered ONTAP	**`storage disk option modify -autoassign`**

If disk autoassignment is enabled, the output shows `disk.auto_assign on`.

b. If your system does not have disk autoassignment enabled or there are disk drives in the same stack owned by both controllers, assign disk drive ownership; otherwise, go to the next step.

To specify the disk drives to be assigned or the system to own the disk drives, for 7-Mode systems see the *Data ONTAP Storage Management Guide for 7-Mode*, for clustered systems see the *Data ONTAP Cluster-Mode Storage and Data Protection Management Guide*. These documents are available on the NetApp Support Site.

mysupport.netapp.com

SAS port pair worksheet and cabling examples for common configurations

You can use the worksheet and cabling examples to cable controller port pairs to the stacks for common configurations.

- The port pairs in the worksheets are color-coded to show to their corresponding connections in the cabling examples; additionally, cables are solid or dashed to distinguish A and C connections from B and D connections.

Color Key			
Cable Color		Connects to...	From...
	Dark blue	Stack 1	Each controller by a unique port pair
	Orange	Stack 2	
	Green	Stack 3	
	Light blue	Stack 4	

Cable Key	
Cable Type	Description
	▪ Connects controller A and C ports to the first disk shelf in a stack. ▪ The primary path from a controller to a stack.
	▪ Connects controller B and D ports to the first disk shelf in a stack. ▪ The secondary path from a controller to a stack.

- Worksheet and cabling examples show cabling port pairs in sequence. Additionally, worksheet and cabling examples for skipping port pairs are included for configurations in which skipping port pairs is a logical option.

  Depending on your configuration, you might want to skip port pairs in order to use different onboard or SAS HBA ports. For example, if you had a 32xx and wanted to use both onboard SAS ports, you would skip a port pair.

- Each cabling example has a version showing disk shelves with the IOMs arranged side by side, similar to how a DS2246 disk shelf is oriented and a version showing disk shelves with the IOMs arranged one above the other, similar to how a DS4246 or DS4243 disk shelf is oriented.

- The cables are numbered to show the sequence in which the configuration can be cabled: controller A and C ports from Controller 1 and then Controller 2 are cabled to the first shelf in Stack 1; controller B and D ports from Controller 1 and then Controller 2 are cabled to the last shelf in Stack 1.

  This sequence is repeated for each stack.

Port pair worksheet and cabling examples for multipath HA configurations with quad-port SAS HBAs

You can use the completed port pair worksheet and cabling examples to cable common multipath HA configurations that have quad-port SAS HBAs. These controllers do not have onboard SAS ports.

Multipath HA with one quad-port SAS HBA and one single-shelf stack

The following worksheet and cabling illustrations show port pair 1a/1d being used.

	Controller	Port pairs								Cable to (the stack's)	
		Stacks (1-8)									
		1	**2**	**3**	**4**	**5**	**6**	**7**	**8**		
A and C ports	Controller 1	1a	1c							First shelf	IOM A ■
	Controller 2										IOM B ■
B and D ports	Controller 1	~~1b~~	~~1d~~							Last shelf	IOM B ●
	Controller 2	1d	1b								IOM A ●

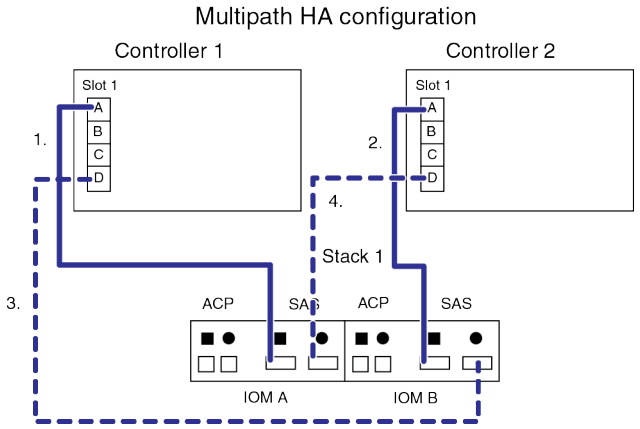

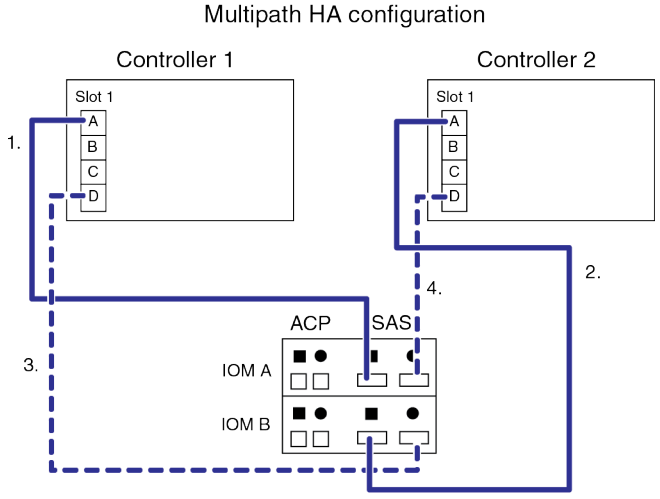

Multipath HA with one quad-port SAS HBA and two single-shelf stacks

The following worksheet and cabling illustrations show port pairs 1a/1d and 1c/1b being used.

	Controller	Port pairs								Cable to (the stack's)	
		Stacks (1-8)									
		1	2	3	4	5	6	7	8		
A and C ports	Controller 1	1a	1c							First shelf	IOM A ■
	Controller 2										IOM B ■
B and D ports	Controller 1	~~1b~~	~~1d~~							Last shelf	IOM B ●
	Controller 2	1d	1b								IOM A ●

Multipath HA configuration

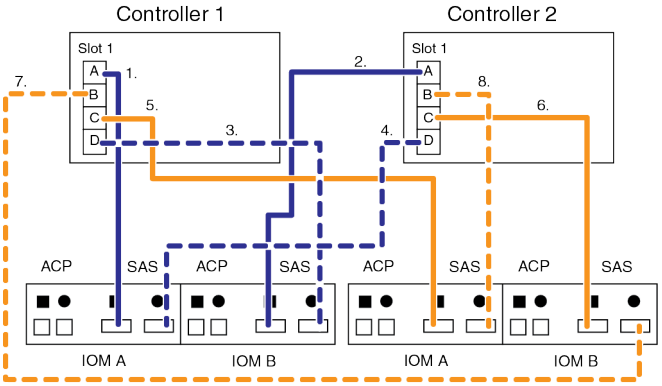

Multipath HA configuration

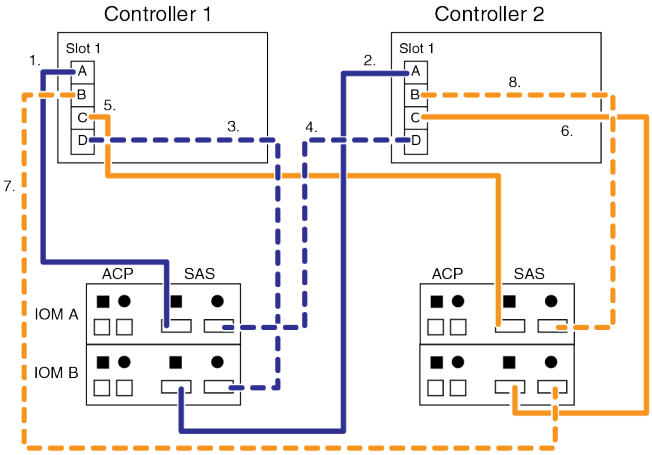

Multipath HA with two quad-port SAS HBAs and two multi-shelf stacks

Four sets of port pairs are available for this configuration: 1a/2b, 2a/1d, 1c/2d, and 2c/1b. You can cable the port pairs in sequence or skip a port pair.

The following worksheet and cabling examples show port pairs being used in sequence: 1a/2b and 2a/1d.

	Controller	Port pairs								Cable to (the stack's)	
		Stacks (1-8)									
		1	2	3	4	5	6	7	8		
A and C ports	Controller 1	1a	2a	1c	2c					First shelf	IOM A ■
	Controller 2										IOM B ■
B and D ports	Controller 1	~~1b~~	~~2b~~	~~1d~~	~~2d~~					Last shelf	IOM B ●
	Controller 2	2b	1d	2d	1b						IOM A ●

Multipath HA configuration

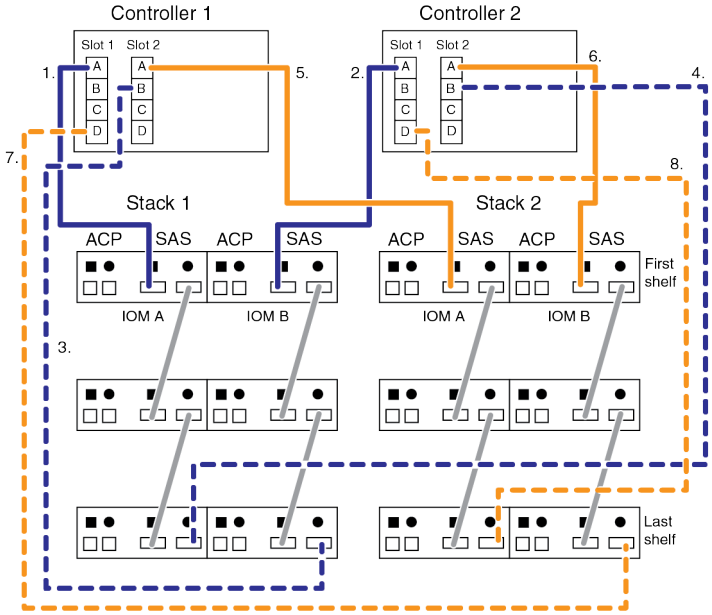

Multipath HA Configuration

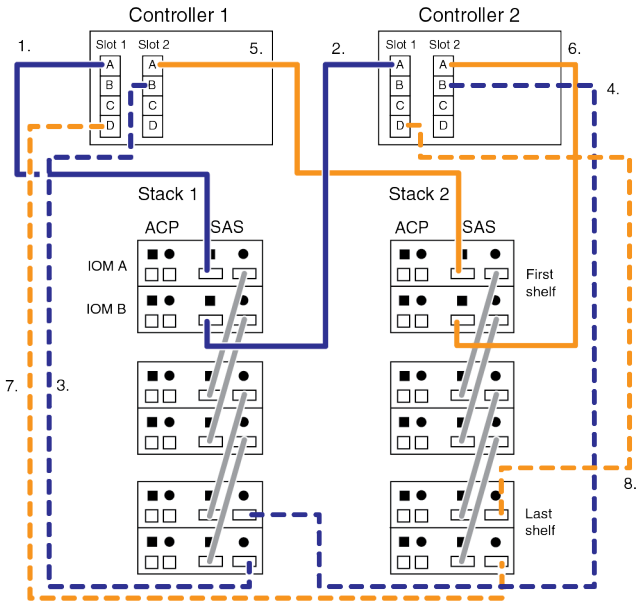

The following worksheet and cabling examples show the middle port pair being skipped to use port pairs 1a/2b and 1c/2d.

Note: If a third stack is added later, you use the port pair that was skipped.

	Controller	Port pairs								Cable to (the stack's)	
		Stacks (1-8)									
		1	3 ~~2~~	2 ~~3~~	4	5	6	7	8		
A and C ports	Controller 1	1a	2a	1c	2c					First shelf	IOM A ■
	Controller 2										IOM B ■
B and D ports	Controller 1	~~1b~~	~~2b~~	~~1d~~	~~2d~~					Last shelf	IOM B ●
	Controller 2	2b	1d	2d	1b						IOM A ●

Multipath HA configuration

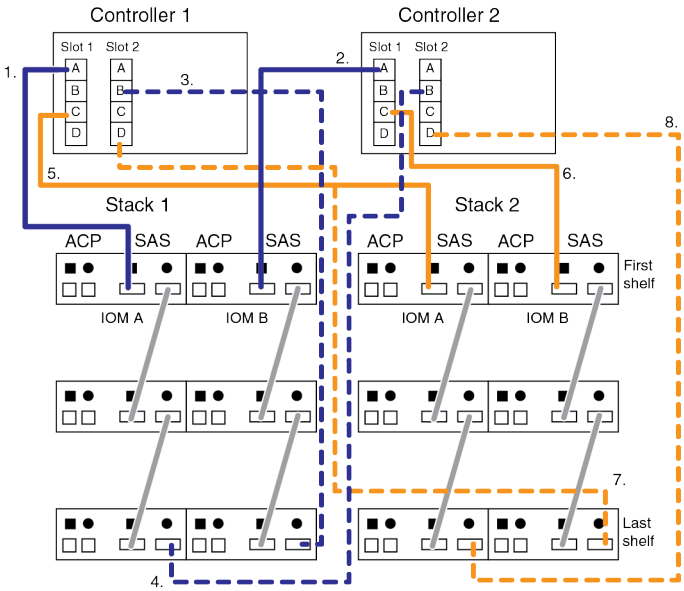

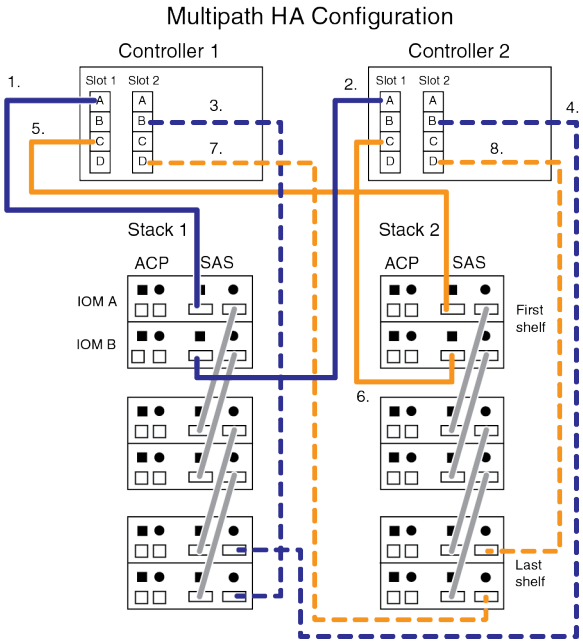

Multipath HA with three quad-port SAS HBAs and three multi-shelf stacks

Six sets of port pairs are available for this configuration: 1a/2b, 2a/3b, 3a/1d, 1c/2d, 2c/3d and 3c/1b. You can cable the port pairs in sequence or skip a port pair.

The following worksheet and cabling examples show port pairs being used in sequence: 1a/2b, 2a/3b, and 3a/1d.

	Controller	Port pairs								Cable to (the stack's)	
		Stacks (1-8)									
		1	2	3	4	5	6	7	8		
A and C ports	Controller 1	1a	2a	3a	1c	2c	3c			First shelf	IOM A ■
	Controller 2										IOM B ■
B and D ports	Controller 1	~~1b~~	~~2b~~	~~3b~~	~~1d~~	~~2d~~	~~3d~~			Last shelf	IOM B ●
	Controller 2	2b	3b	1d	2d	3d	1b				IOM A ●

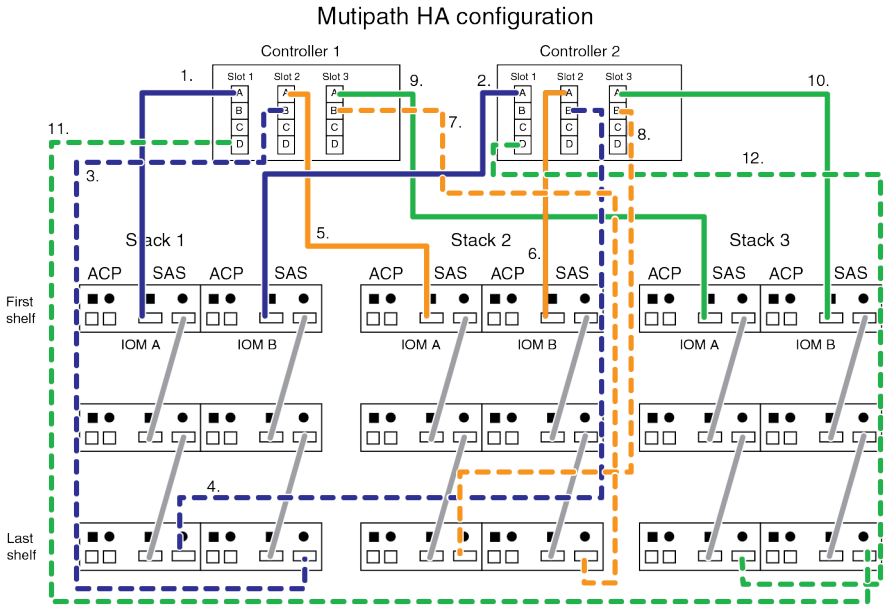

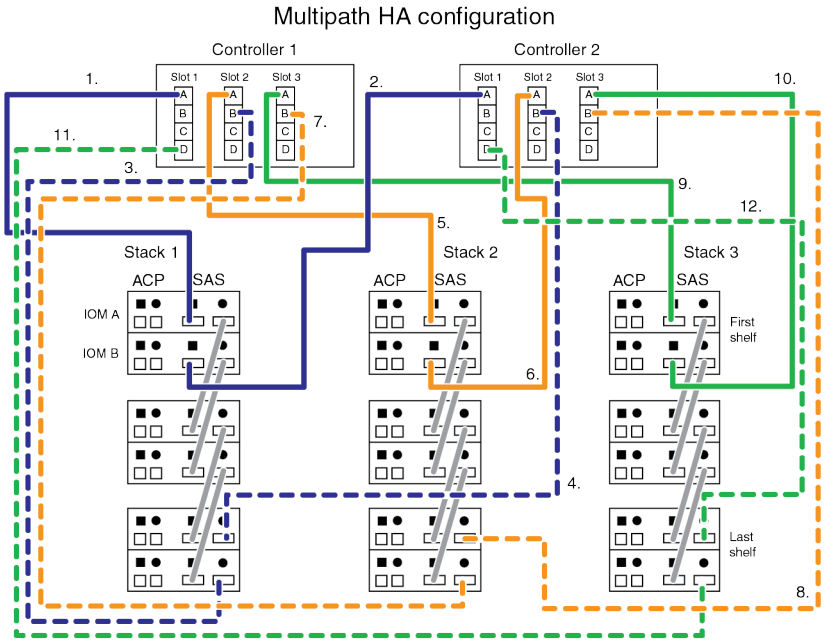

The following worksheet and cabling examples show port pairs being skipped to use port pairs 1a/2b, 3a/1d, and 2c/3d.

Note: If more stacks are added later, you use the port pairs that were skipped.

	Controller	Port pairs								Cable to (the stack's)	
		Stacks (1-8)									
		1	~~4~~ ~~2~~	~~2~~ ~~3~~	~~5~~ ~~4~~	~~3~~ ~~5~~	6	7	8		
A and C ports	Controller 1	1a	2a	3a	1c	2c	3c			First shelf	IOM A ■
	Controller 2										IOM B ■
B and D ports	Controller 1	~~1b~~	~~2b~~	~~3b~~	~~1d~~	~~2d~~	~~3d~~			Last shelf	IOM B ●
	Controller 2	2b	3b	1d	2d	3d	1b				IOM A ●

Mutipath HA configuration

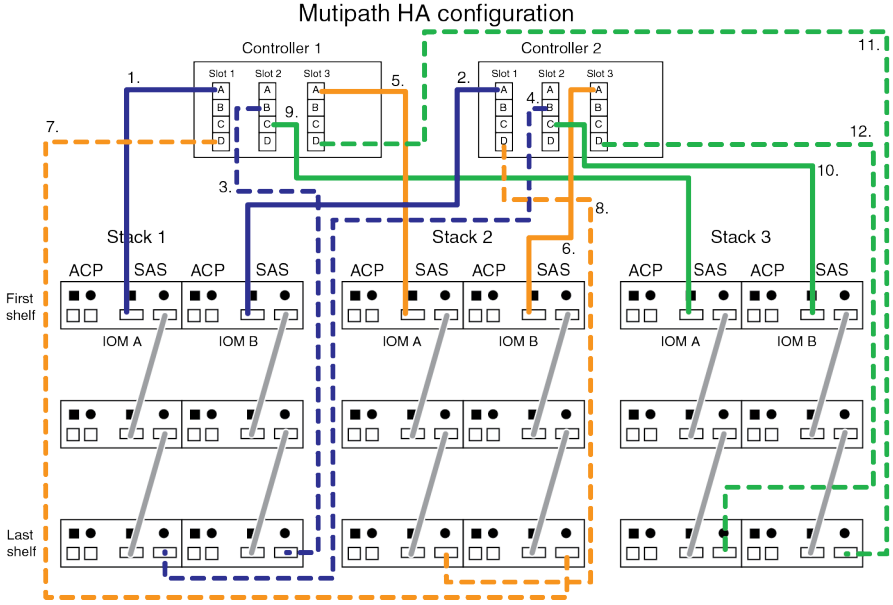

Multipath HA configuration

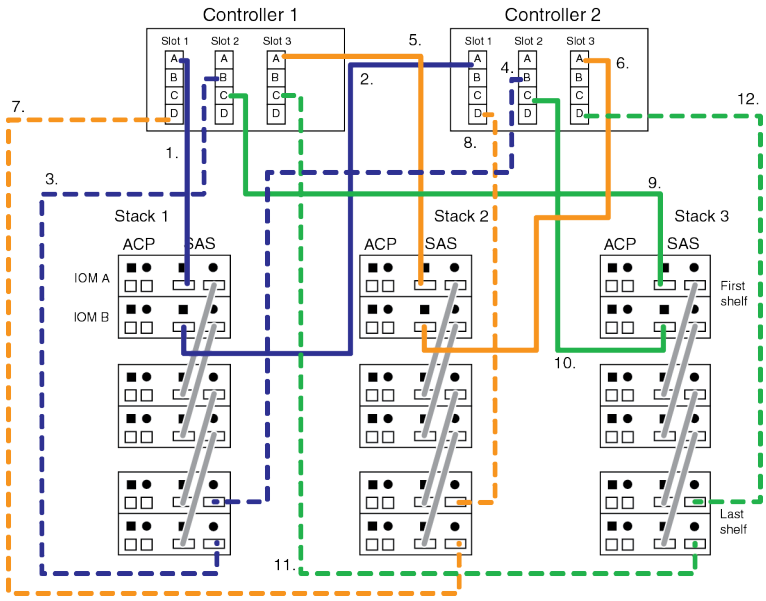

Multipath HA with four quad-port SAS HBAs and four multi-shelf stacks

Eight sets of port pairs are available for this configuration: 1a/2b, 2a/3b, 3a/4b, 4a/1d, 1c/2d, 2c/3d, 3c/4d, and 4c/1b. You can cable the port pairs in sequence or skip a port pair.

The following worksheet and cabling examples show the port pairs being used in sequence: 1a/2b, 2a/3b, 3a/4b, and 4a/1d.

	Controller	Port pairs								Cable to (the stack's)	
		Stacks (1-8)									
		1	2	3	4	5	6	7	8		
A and C ports	Controller 1	1a	2a	3a	4a	1c	2c	3c	4c	First shelf	IOM A ■
	Controller 2										IOM B ■
B and D ports	Controller 1	~~1b~~	~~2b~~	~~3b~~	~~4b~~	~~1d~~	~~2d~~	~~3d~~	~~4d~~	Last shelf	IOM B ●
	Controller 2	2b	3b	4b	1d	2d	3d	4d	1b		IOM A ●

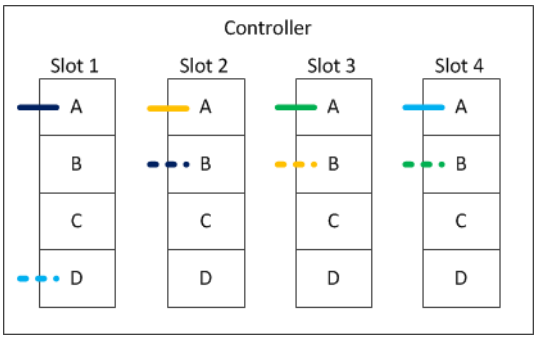

The following worksheet and cabling examples shows port pairs being skipped to use port pairs 1a/2b, 3a/4b, 1c/2d, and 3c/4d.

Note: If more stacks are added later, you use the port pairs that were skipped.

	Controller	Port pairs								Cable to (the stack's)	
		Stacks (1-8)									
		1	~~2~~ 5	~~3~~ 2	~~4~~ 6	~~5~~ 3	~~6~~ 7	~~7~~ 4	8		
A and C ports	Controller 1	1a	2a	3a	4a	1c	2c	3c	4c	First shelf	IOM A ■
	Controller 2										IOM B ■
B and D ports	Controller 1	~~1b~~	~~2b~~	~~3b~~	~~4b~~	~~1d~~	~~2d~~	~~3d~~	~~4d~~	Last shelf	IOM B ●
	Controller 2	2b	3b	4b	1d	2d	3d	4d	1b		IOM A ●

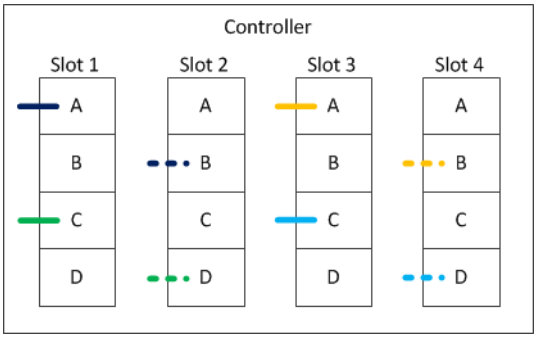

Port pair worksheet and cabling examples for single-controller-dual-path configurations with quad-port SAS HBAs

You can use the completed port pair worksheet and cabling examples to cable common single-controller-dual-path configurations that have quad-port SAS HBAs. These controllers do not have onboard SAS ports.

Single-controller-dual-path with one quad-port SAS HBA and one multi-shelf stack

The following worksheet and cabling examples use port pair 1a/1d:

	Controller	Port pairs								Cable to (the stack's)	
		Stacks (1-8)									
		1	2	3	4	5	6	7	8		
A and C ports	Controller 1	1a	1c							First shelf	IOM A ■
	~~Controller 2~~										~~IOM B ■~~
B and D ports	Controller 1	~~1b~~	~~1d~~							Last shelf	IOM B ●
	~~Controller 2~~	1d	1b								~~IOM A ●~~

Single-controller-dual-path configuration

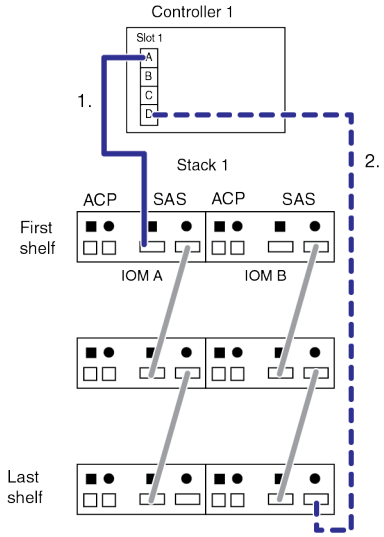

Single-controller-dual-path configuration

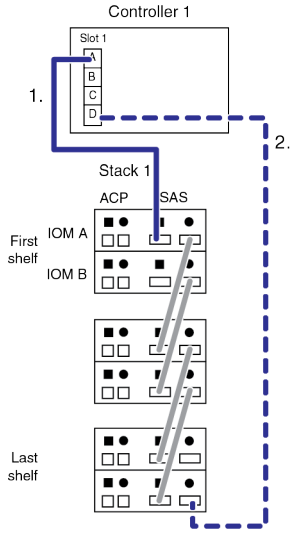

Single-controller-dual-path with one quad-port SAS HBA and two multi-shelf stacks

The following worksheet and cabling examples use port pairs 1a/1d and 1c/1b:

	Controller	Port pairs								Cable to (the stack's)	
		Stacks (1-8)									
		1	2	3	4	5	6	7	8		
A and C ports	Controller 1	1a	1c							First shelf	IOM A ■
	~~Controller 2~~										~~IOM B ■~~
B and D ports	Controller 1	~~1b~~	~~1d~~							Last shelf	IOM B ●
	~~Controller 2~~	1d	1b								~~IOM A ●~~

Single-controller-dual-path configuration

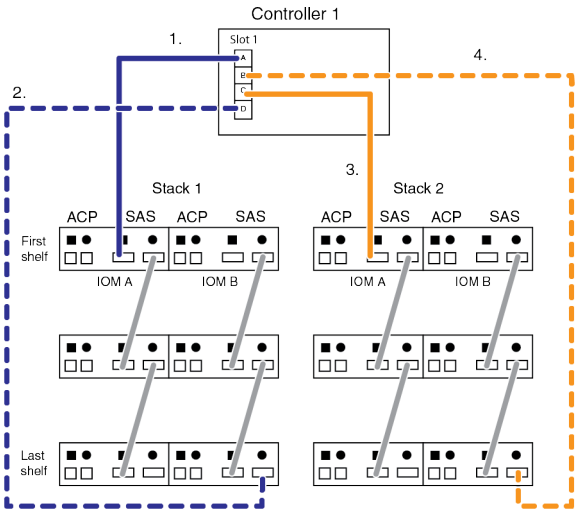

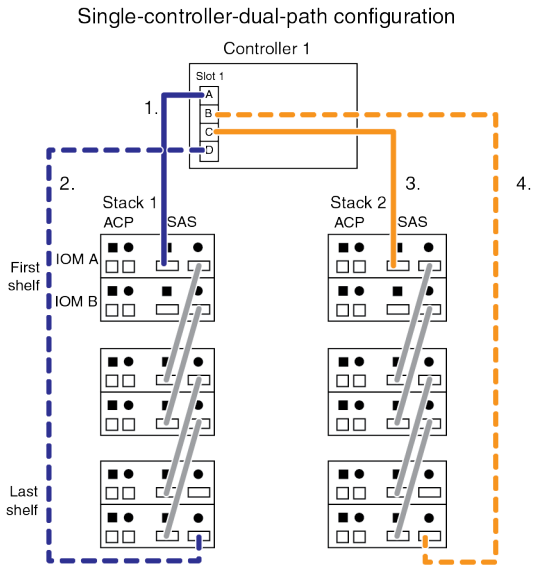

Single-controller-dual-path with two quad-port SAS HBAs and two multi-shelf stacks

Four sets of port pairs are available for this configuration: 1a/2b, 2a/1d, 1c/2d, and 2c/1b. You can cable the port pairs in sequence or skip a port pair.

The following worksheet and cabling examples use port pairs in sequence: 1a/2b and 2a/1d.

	Controller	Port pairs								Cable to (the stack's)	
		Stacks (1-8)									
		1	2	3	4	5	6	7	8		
A and C ports	Controller 1	1a	2a	1c	2c					First shelf	IOM A ■
	~~Controller 2~~										~~IOM B ■~~
B and D ports	Controller 1	~~1b~~	~~2b~~	1d	2d					Last shelf	IOM B ●
	~~Controller 2~~	2b	1d	2d	1b						~~IOM A ●~~

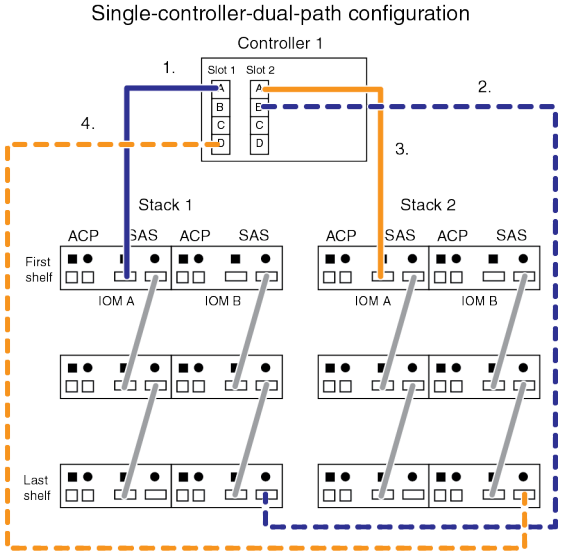

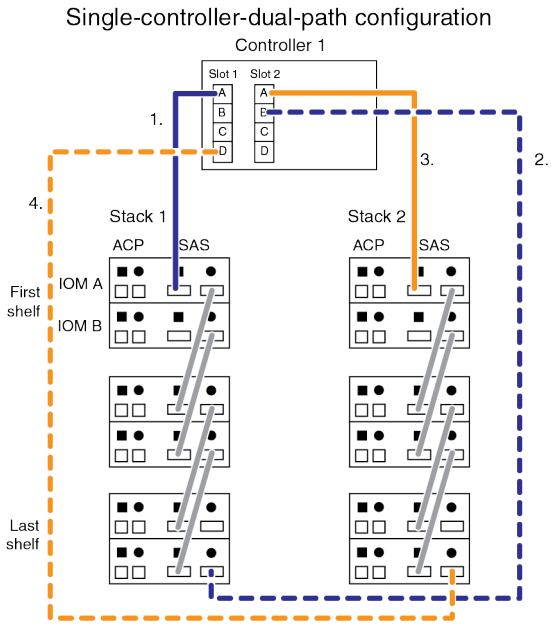

The following worksheet and cabling examples skip the middle port pair to use port pairs 1a/2b and 1c/2d.

Note: If a third stack is added later, you use the port pair that was skipped.

	Controller	Port pairs								Cable to (the stack's)	
		Stacks (1-8)									
		1	~~2~~ 3	~~3~~ 2	4	5	6	7	8		
A and C ports	Controller 1	1a	2a	1c	2c					First shelf	IOM A ■
	~~Controller 2~~										~~IOM B ■~~
B and D ports	Controller 1	~~1b~~	~~2b~~	~~1d~~	~~2d~~					Last shelf	IOM B ●
	~~Controller 2~~	2b	1d	2d	1b						~~IOM A ●~~

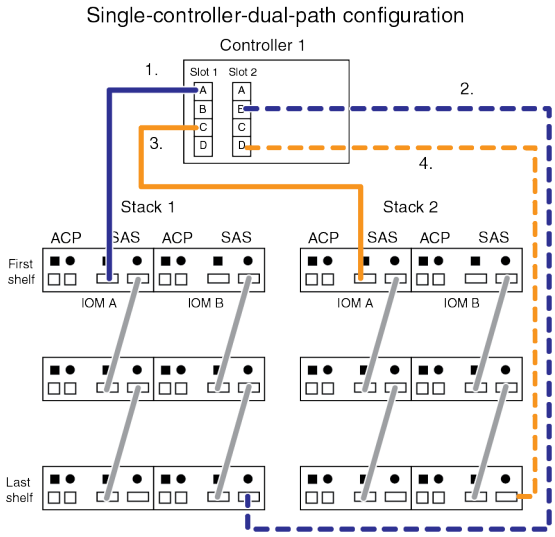

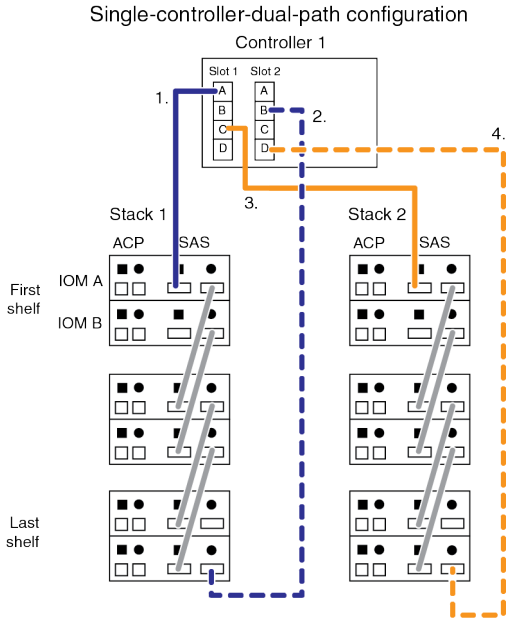

Port pair worksheet and cabling examples for 32xx and 8020 configurations

You can use the completed port pair worksheet and cabling examples to cable common 32xx and 8020 dual-chassis multipath HA and single-chassis multipath HA configurations.

32xx or 8020 dual-chassis multipath HA

Three sets of port pairs are available for the following configuration: 0a/1b, 1a/1d, and, 1c/0b. You can cable the port pairs in sequence or skip a port pair.

The following worksheet and cabling examples use port pairs in sequence: 0a/1b and 1a/1d.

	Controller	Port pairs								Cable to (the stack's)	
		Stacks (1-8)									
		1	2	3	4	5	6	7	8		
A and C ports	Controller 1	0a	1a	1c						First shelf	IOM A ■
	Controller 2										IOM B ■
B and D ports	Controller 1	~~0b~~	~~1b~~	~~1d~~						Last shelf	IOM B ●
	Controller 2	1b	1d	0b							IOM A ●

Multipath HA configuration

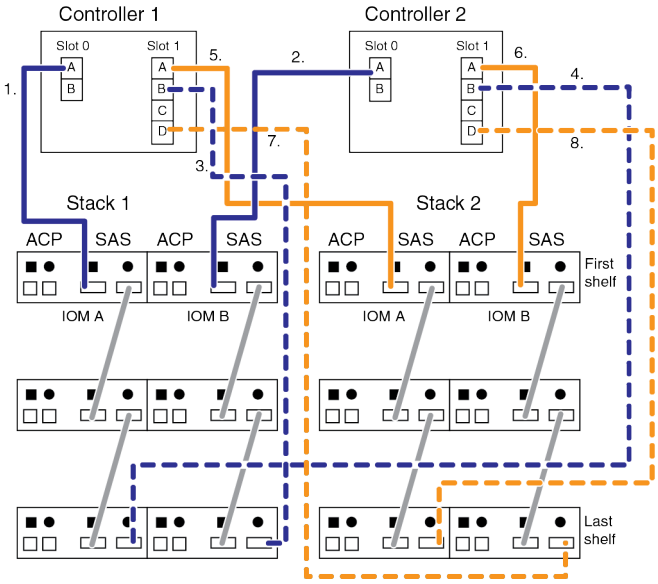

Multipath HA configuration

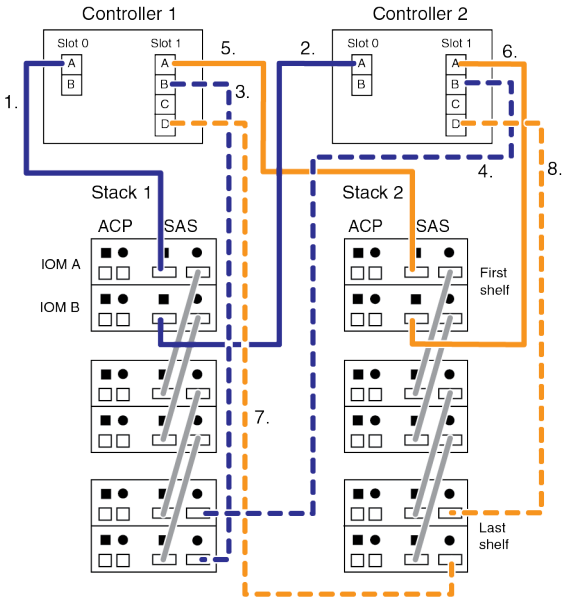

The following worksheet and cabling examples skip the middle port pair to use port pairs 0a/1b and 1c/0b.

Note: If a third stack is added later, you use the port pair that was skipped.

	Controller	Port pairs								Cable to (the stack's)	
		Stacks (1-8)									
		1	~~2~~ 3	~~3~~ 2	4	5	6	7	8		
A and C ports	Controller 1	0a	1a	1c						First shelf	IOM A ■
	Controller 2										IOM B ■
B and D ports	Controller 1	~~0b~~	~~1b~~	~~1d~~						Last shelf	IOM B ●
	Controller 2	1b	1d	0b							IOM A ●

Multipath HA configuration

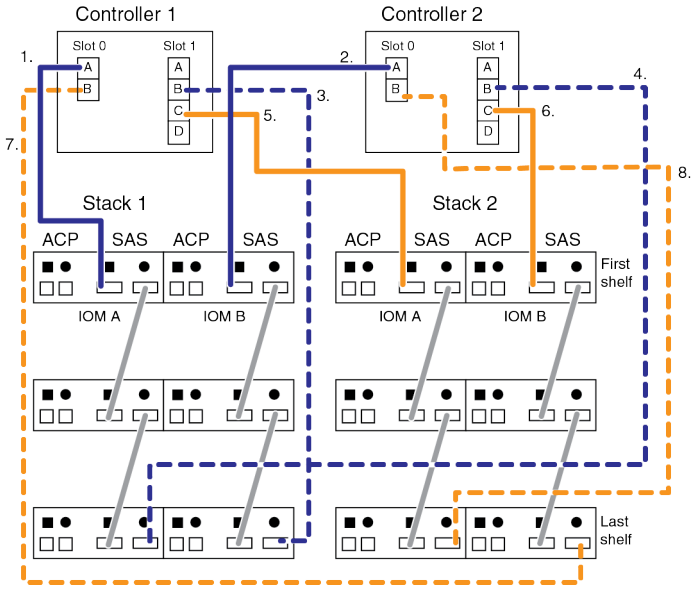

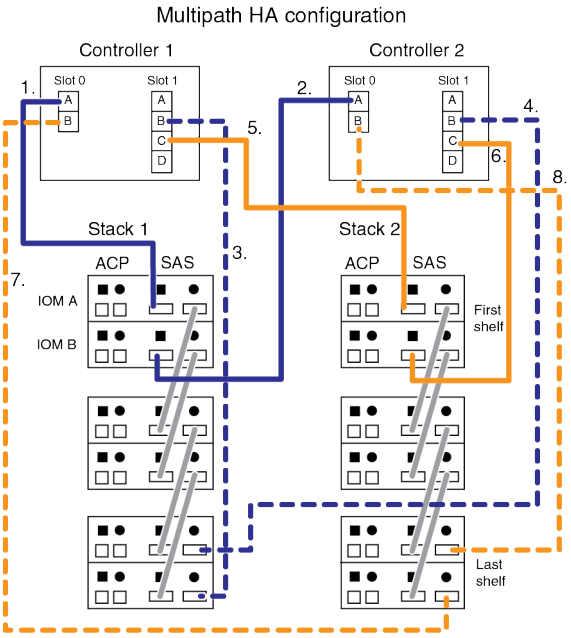

32xx or 8020 single-chassis multipath HA

One set of port pairs is available for the following configuration: 0a/0b.

	Controller	Port pairs								Cable to (the stack's)	
		Stacks (1-8)									
		1	2	3	4	5	6	7	8		
A and C ports	Controller 1	0a								First shelf	IOM A ■
	Controller 2										IOM B ■
B and D ports	Controller 1									Last shelf	IOM B ●
	Controller 2	0b									IOM A ●

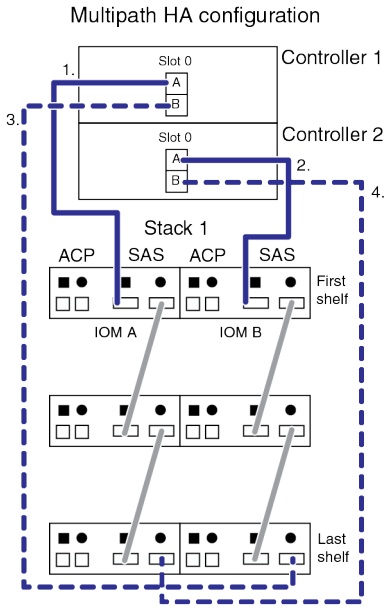

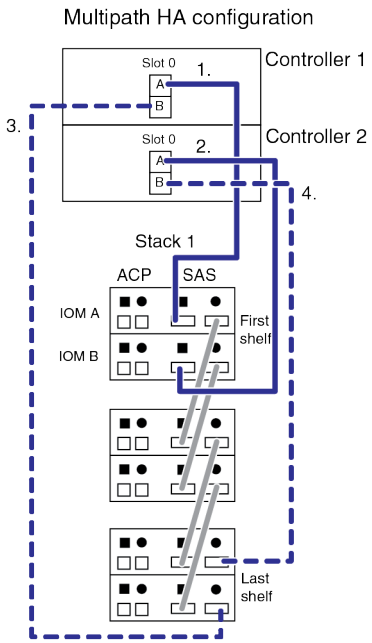

Port pair worksheet and cabling examples for 80xx configurations with four onboard SAS ports

You can use the completed port pair worksheet and cabling examples to cable common 80xx multipath HA configurations that have four onboard SAS ports.

80xx with four onboard SAS ports and one single-shelf stack

The following worksheet and cabling examples use port pair 0a/0d:

	Controller	Port pairs								Cable to (the stack's)	
		Stacks (1-8)									
		1	2	3	4	5	6	7	8		
A and C ports	Controller 1	0a	0c							First shelf	IOM A ■
	Controller 2										IOM B ■
B and D ports	Controller 1	~~0b~~	~~0d~~							Last shelf	IOM B ●
	Controller 2	0d	0b								IOM A ●

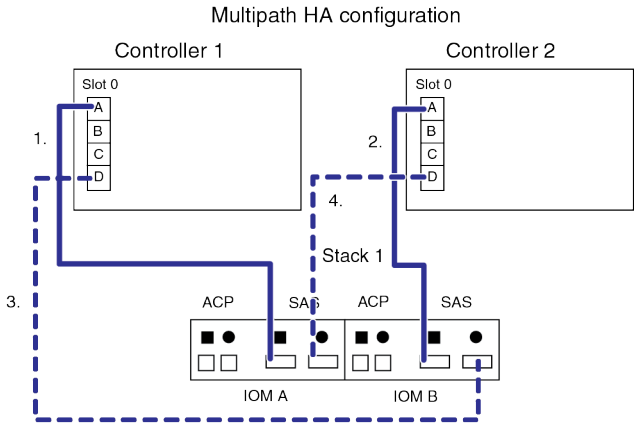

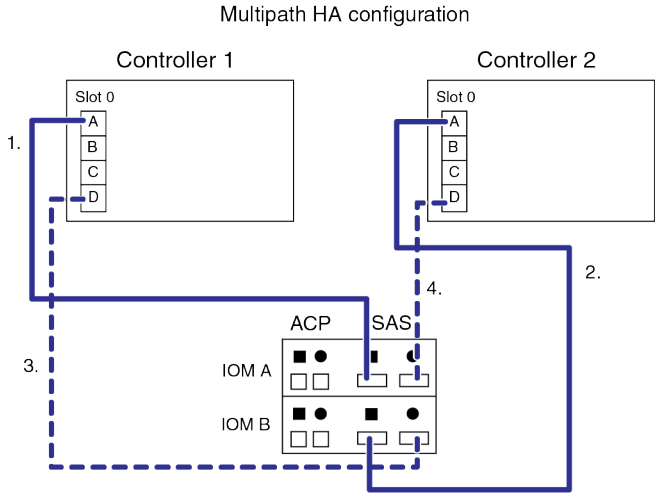

80xx with four onboard SAS ports and two single-shelf stacks

The following worksheet and cabling examples use port pairs 0a/0d and 0c/0b:

	Controller	Port pairs								Cable to (the stack's)	
		Stacks (1-8)									
		1	2	3	4	5	6	7	8		
A and C ports	Controller 1	0a	0c							First shelf	IOM A ■
	Controller 2										IOM B ■
B and D ports	Controller 1	~~0b~~	~~0d~~							Last shelf	IOM B ●
	Controller 2	0d	0b								IOM A ●

Multipath HA configuration

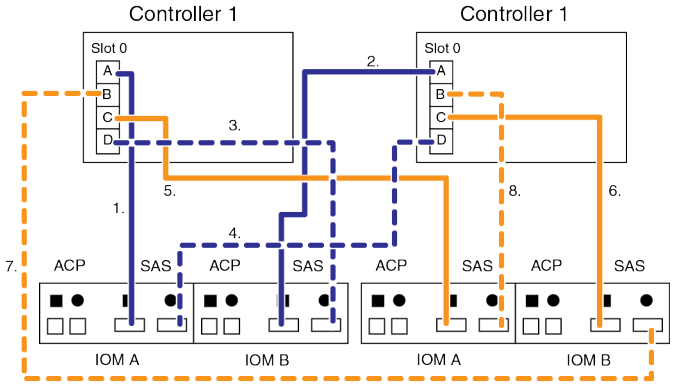

Multipath HA configuration

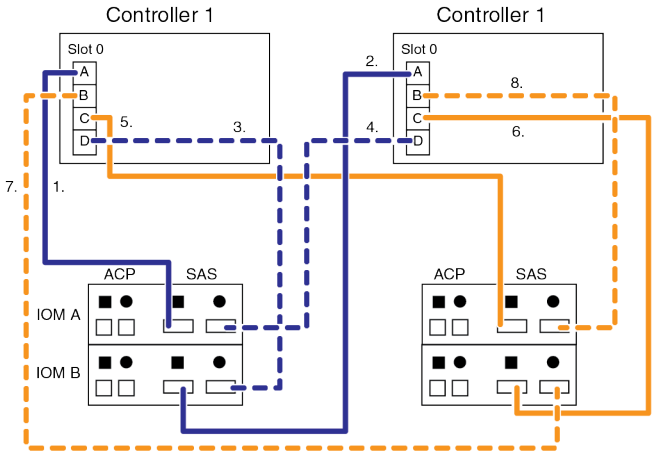

80xx with four onboard SAS ports and two multi-shelf stacks

The following worksheet and cabling examples use port pairs 0a/0d and 0c/0b:

	Controller	Port pairs								Cable to (the stack's)	
		Stacks (1-8)									
		1	2	3	4	5	6	7	8		
A and C ports	Controller 1	0a	0c							First shelf	IOM A ■
	Controller 2										IOM B ■
B and D ports	Controller 1	~~0b~~	~~0d~~							Last shelf	IOM B ●
	Controller 2	0d	0b								IOM A ●

Multipath HA configuration

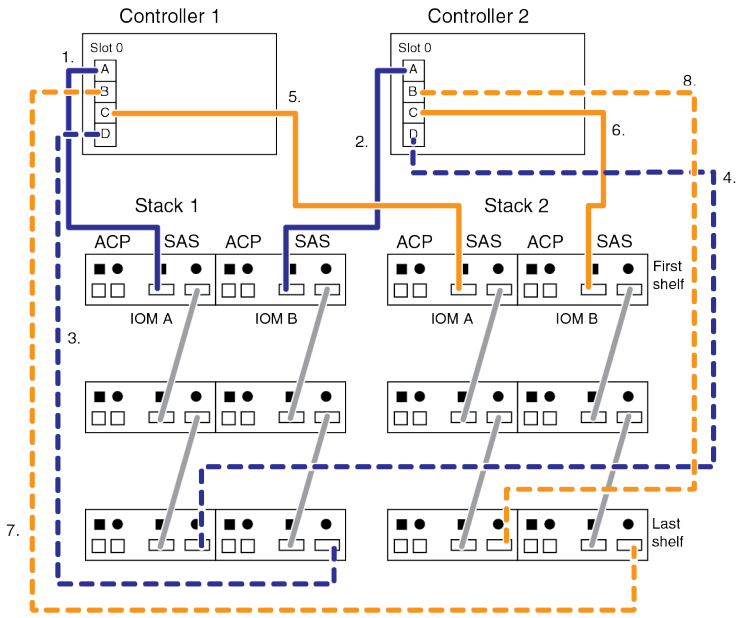

Multipath HA Configuration

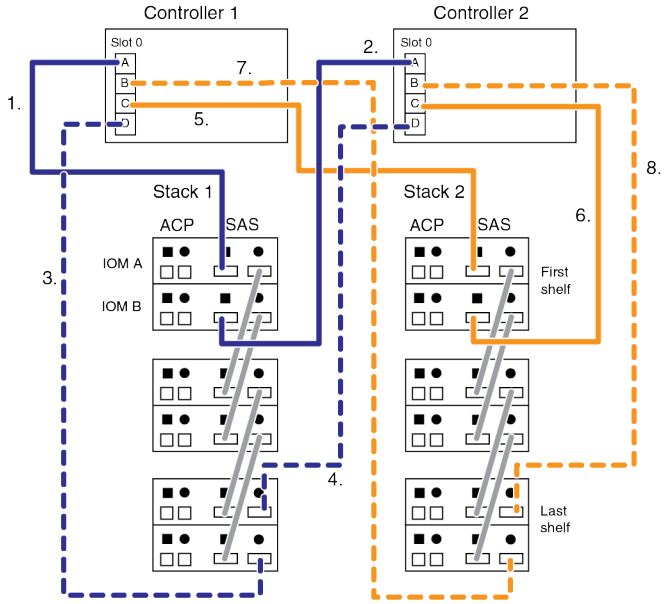

Port pair worksheet and cabling examples for PCM configurations

You can use the completed port pair worksheet and cabling examples to cable platform controller module (PCM) multipath HA configurations, single-controller-dual-path configurations, and single-controller-single-path configurations.

The cabling examples show systems with PCMs arranged side by side, similar to how a FAS2220 is oriented, but the cabling also applies to systems with PCMs arranged one above the other, similar to how a FAS2240-4 is oriented.

PCM multipath HA with one multi-shelf stack

The following worksheet and cabling examples use port pair 0a/0b:

	Controller	Port pairs Stacks (1-8) 1	2	3	4	5	6	7	8	Cable to (the stack's)	
A and C ports	Controller 1	0a								First shelf	IOM A ■
	Controller 2										IOM B ■
B and D ports	Controller 1									Last shelf	IOM B ●
	Controller 2	0b									IOM A ●

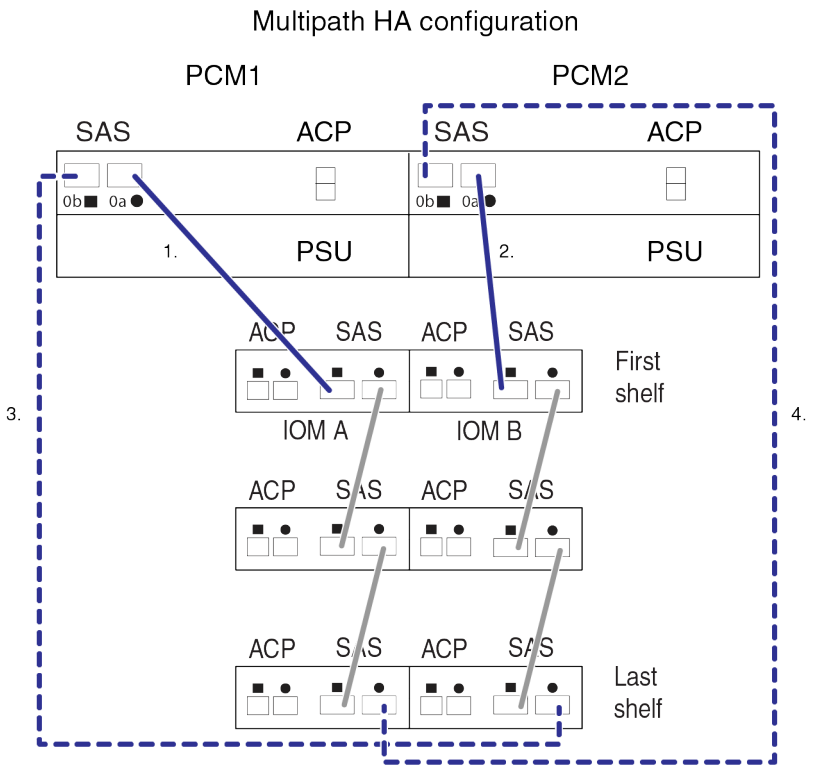

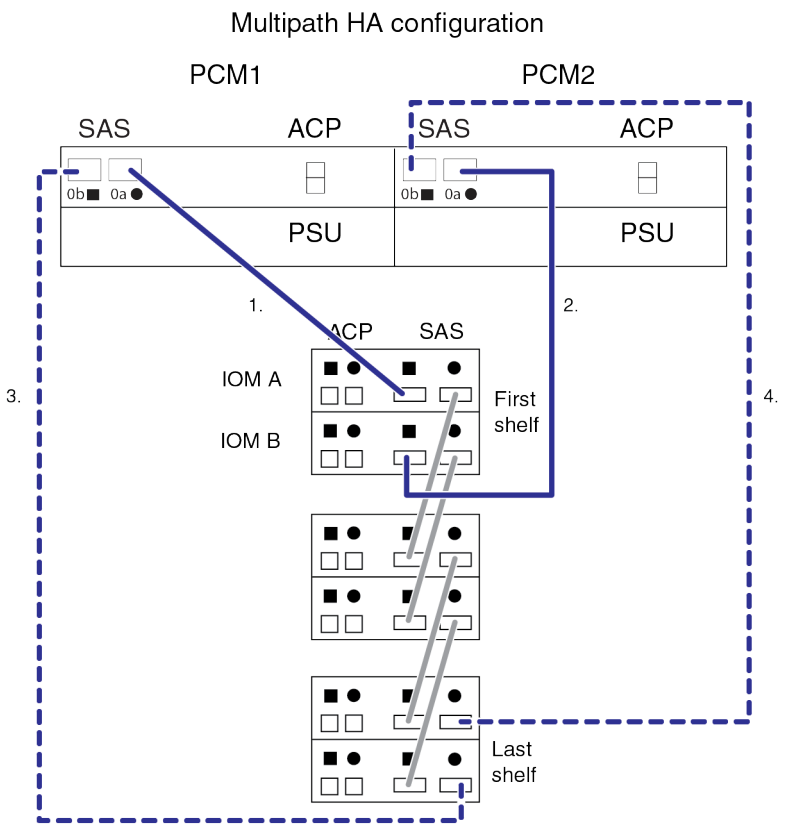

PCM multipath HA with no external disk shelves

External cables connect the SAS ports on the two controller modules to enable multipath HA for the internal disk drives.

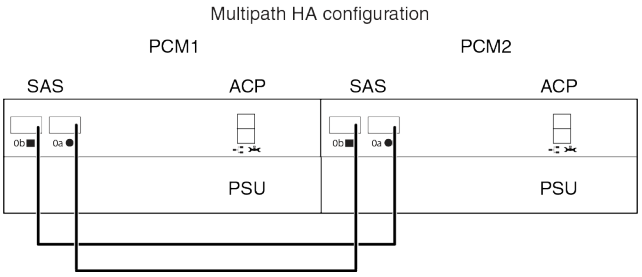

PCM single-controller-dual-path with one multi-shelf stack

The following worksheet and cabling examples use port pair 0a/0b.

> **Note:** Dual-path provides greater resiliency, but when dual-path is used, Data ONTAP 8.1.x issues occasional warnings to the console because mixed paths are detected. To avoid the warnings, single-path connections to the external SAS storage are a supported option for these configurations.

In these examples, the controller module is installed in slot A of the chassis (PCM1) and therefore cabled according to the rules in the “Controller-to-stack SAS connection rules” section for ports on controller 1 (PCM1). If you install the controller module in slot B (PCM2), you need to comply with the rules in the “Controller-to-stack SAS connection rules” section for ports on controller 2 (PCM2).

Note: For PCM configurations, it is especially important to follow the cabling rules for controller 1 (PCM1) and controller 2 (PCM2) connections because you must have same-domain connectivity between the PCM 0a port (the embedded storage) and the stack of disk shelves it is connected to.

For example, a PCM located in slot A of the chassis (PCM1) is in domain A (IOM A); therefore, its 0a port must connect to domain A (IOM A) in the stack. A PCM located in slot B of the chassis (PCM2) is in domain B (IOM B); therefore, its port 0a must connect to domain B (IOM B) in the stack.

By following the rules, you avoid cross-connecting domains, which exposes your system to resiliency issues that prevent you from performing nondisruptive procedures safely.

	Controller	Port pairs								Cable to (the stack's)	
		Stacks (1-8)									
		1	2	3	4	5	6	7	8		
A and C ports	Controller 1	0a								First shelf	IOM A ■
	~~Controller 2~~										~~IOM B ■~~
B and D ports	Controller 1									Last shelf	IOM B ●
	~~Controller 2~~	0b									~~IOM A ●~~

Single-controller-dual-path configuration

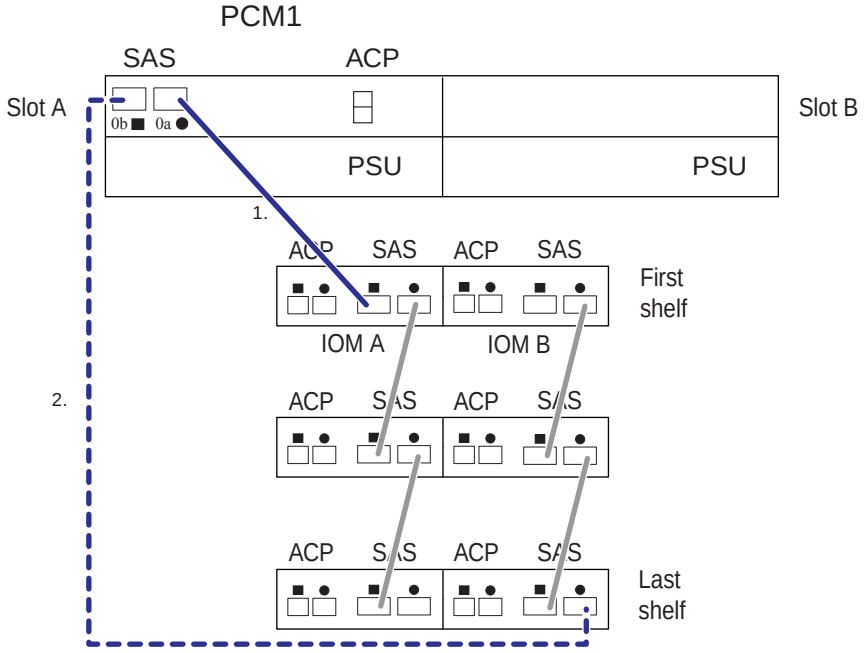

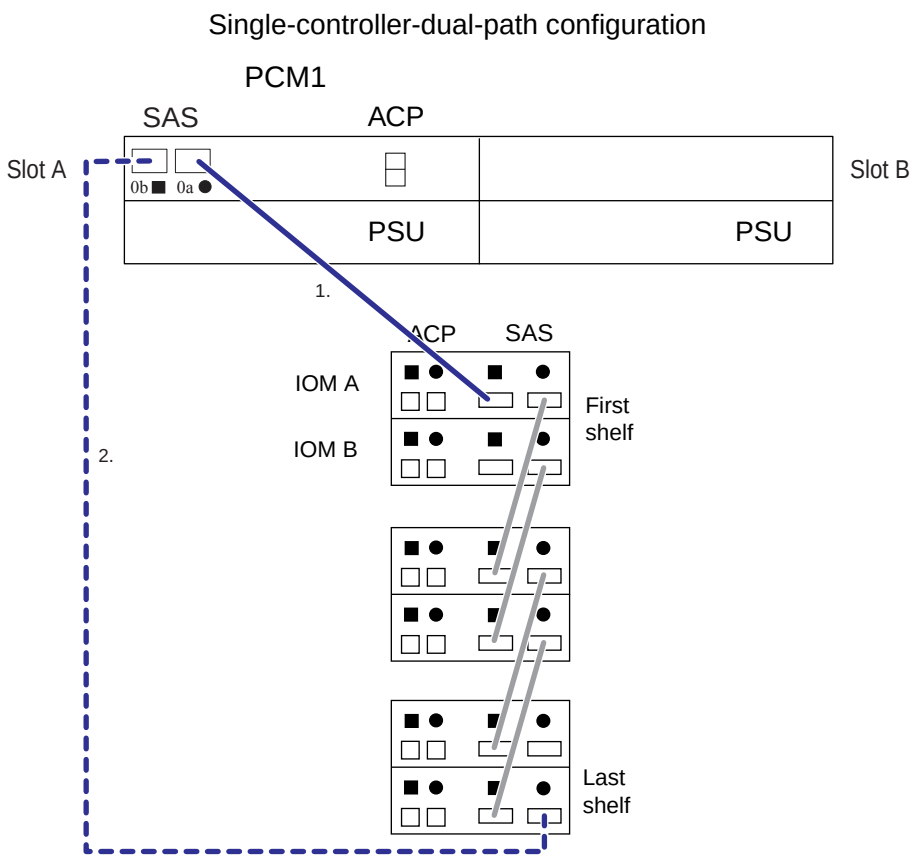

PCM single-controller-single-path with one multi-shelf stack

The following worksheet and cabling examples use port 0a.

In these examples, the controller module is installed in slot A of the chassis (PCM1) and therefore cabled according to the rules in the “Controller-to-stack SAS connection rules” section for ports on controller 1 (PCM1). If you install the controller module in slot B (PCM2), you need to comply with the rules in the “Controller-to-stack SAS connection rules” section for ports on controller 2 (PCM2).

> **Note:** For PCM configurations, it is especially important to follow the cabling rules for controller 1 (PCM1) and controller 2 (PCM2) connections because you must have same-domain connectivity between the PCM 0a port (the embedded storage) and the stack of disk shelves it is connected to.
>
> For example, a PCM located in slot A of the chassis (PCM1) is in domain A (IOM A); therefore, its 0a port must connect to domain A (IOM A) in the stack. A PCM located in slot B of the chassis (PCM2) is in domain B (IOM B); therefore, its port 0a must connect to domain B (IOM B) in the stack.
>
> By following the rules, you avoid cross-connecting domains, which exposes your system to resiliency issues that prevent you from performing nondisruptive procedures safely.

	Controller	Port pairs								Cable to (the stack's)	
		Stacks (1-8)									
		1	2	3	4	5	6	7	8		
A and C ports	Controller 1	0a								First shelf	IOM A ■
	~~Controller 2~~										~~IOM B ■~~
B and D ports	~~Controller 1~~									~~Last shelf~~	~~IOM B ●~~
	~~Controller 2~~	~~0b~~									~~IOM A ●~~

Single-controller-single-path configuration

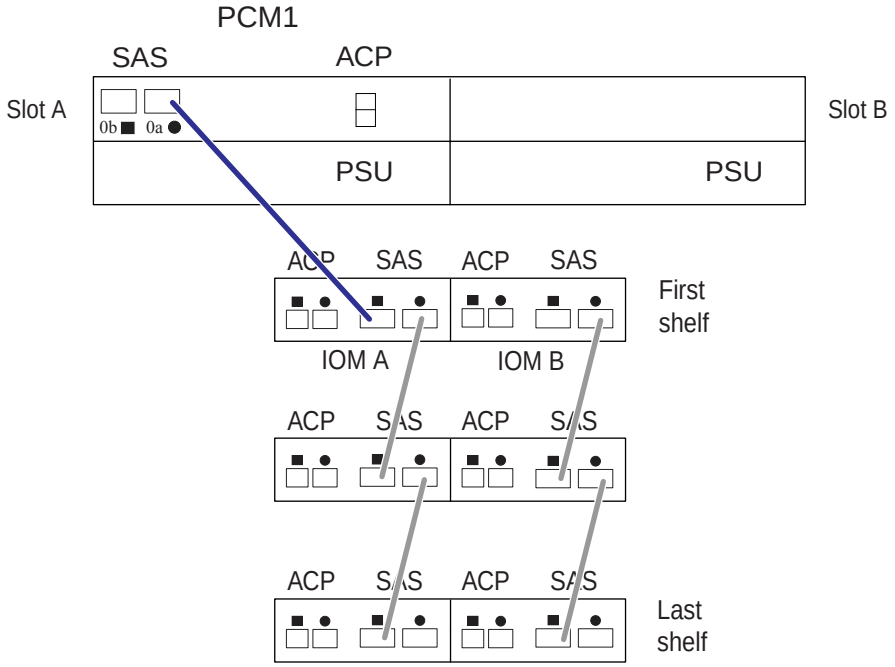

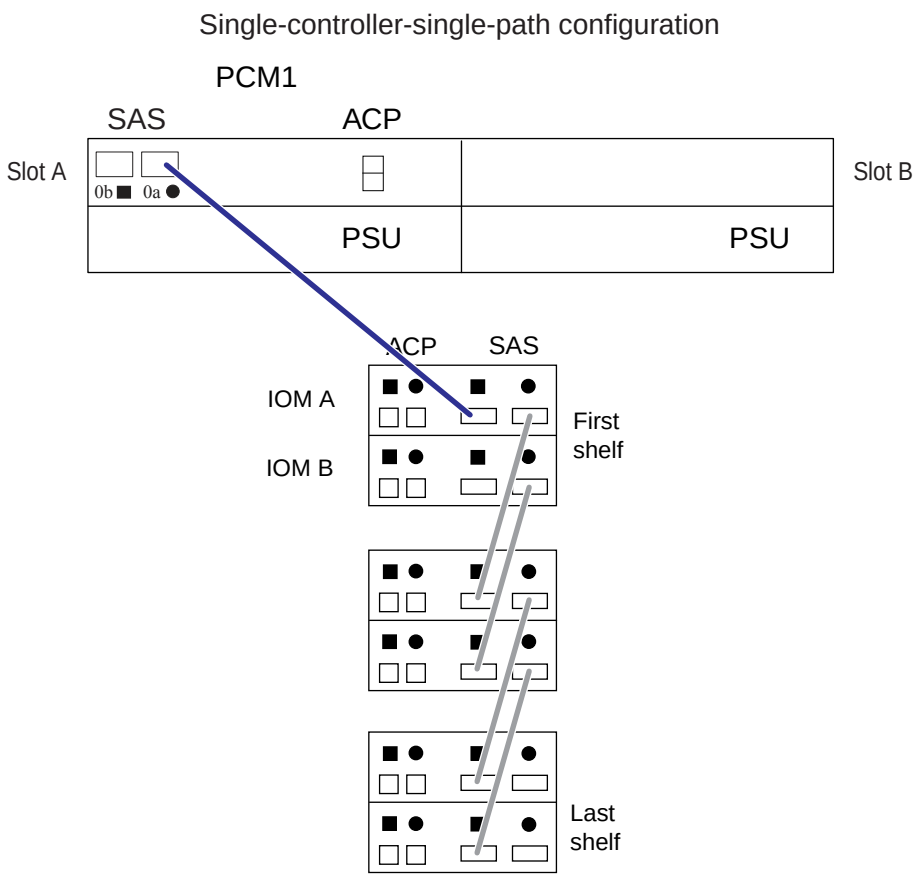

Port pair worksheet and cabling examples for FAS2050 configurations

You can use the completed port pair worksheet and cabling examples to cable FAS2050 multipath HA and single-controller-dual-path configurations.

Note: QSFP-to-mini-SAS copper cables are used for FAS2050 configurations to connect disk shelves to the dual-port mini-SAS HBAs on the controller.

FAS2050 multipath HA with one multi-shelf stack

The following worksheet and cabling examples use port pair 1a/1b.

	Controller	Port pairs								Cable to (the stack's)	
		Stacks (1-8)									
		1	2	3	4	5	6	7	8		
A and C ports	Controller 1	1a								First shelf	IOM A ■
	Controller 2										IOM B ■
B and D ports	Controller 1									Last shelf	IOM B ●
	Controller 2	1b									IOM A ●

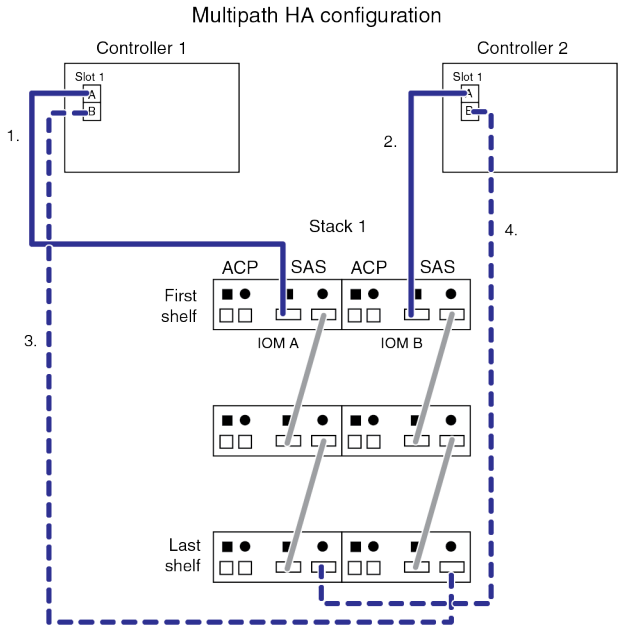

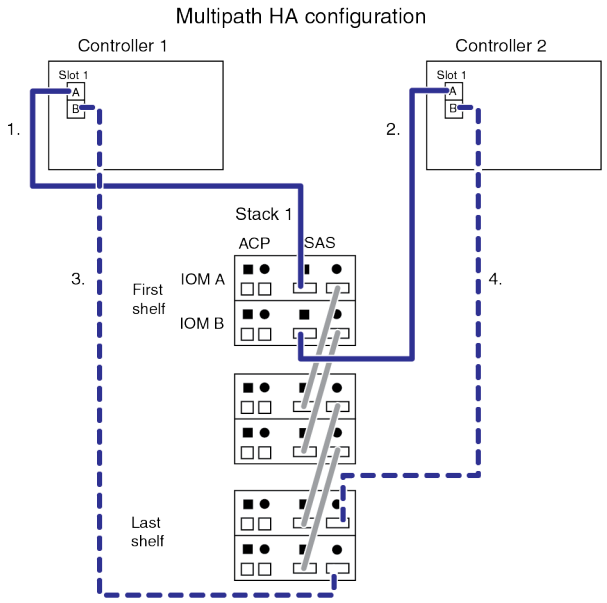

FAS2050 multipath HA with one single-shelf stack

The following worksheet and cabling examples use port pair 1a/1b.

	Controller	Port pairs								Cable to (the stack's)	
		Stacks (1-8)									
		1	2	3	4	5	6	7	8		
A and C ports	Controller 1	1a								First shelf	IOM A ■
	Controller 2										IOM B ■
B and D ports	Controller 1									Last shelf	IOM B ●
	Controller 2	1b									IOM A ●

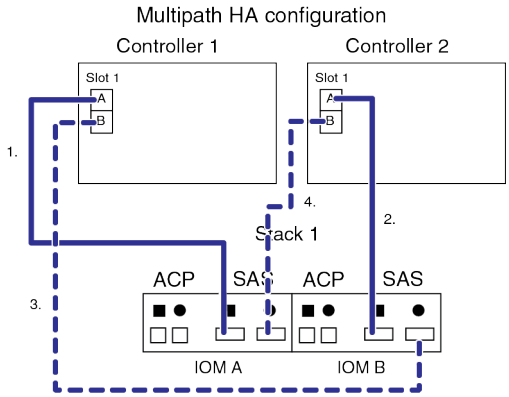

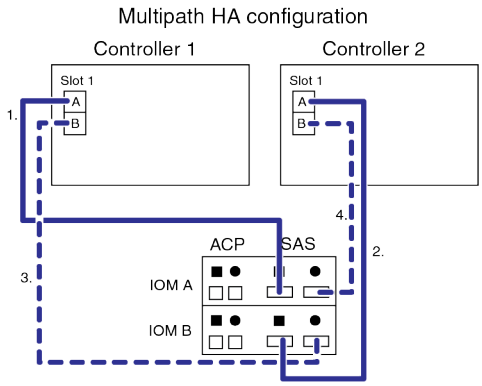

FAS2050 single-controller-dual-path with one multi-shelf stack

The following worksheet and cabling examples use port pair 1a/1b.

Note: For single-controller FAS20xx configurations, the controller is in Slot B (the bottom slot); therefore, the controller is cabled as if it were Controller 2. If a second controller is added to make this an HA pair configuration, the new controller is cabled as Controller 1.

	Controller	Port pairs								Cable to (the stack's)	
		Stacks (1-8)									
		1	2	3	4	5	6	7	8		
A and C ports	~~Controller 1~~	1a								First shelf	~~IOM A ■~~
	Controller 2										IOM B ■
B and D ports	~~Controller 1~~									Last shelf	~~IOM B ●~~
	Controller 2	1b									IOM A ●

Single-controller-dual-path configuration

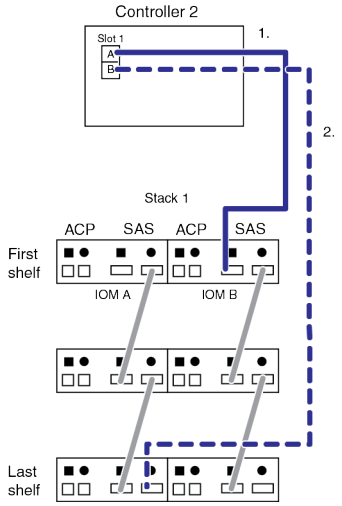

Single-controller-dual-path configuration

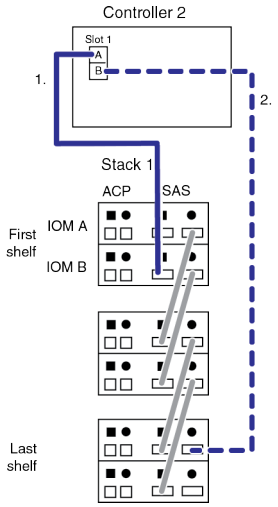

FAS2050 single-controller-dual-path with one single-shelf stack

The following worksheet and cabling examples use port pair 1a/1b.

Note: For single-controller FAS20xx configurations, the controller is in Slot B (the bottom slot); therefore, the controller is cabled as if it were Controller 2. If a second controller is added to make this an HA pair configuration, the new controller is cabled as Controller 1.

	Controller	Port pairs								Cable to (the stack's)	
		Stacks (1-8)									
		1	2	3	4	5	6	7	8		
A and C ports	~~Controller 1~~	1a								First shelf	~~IOM A ■~~
	Controller 2										IOM B ■
B and D ports	~~Controller 1~~									Last shelf	~~IOM B ●~~
	Controller 2	1b									IOM A ●

Single-controller-dual-path configuration

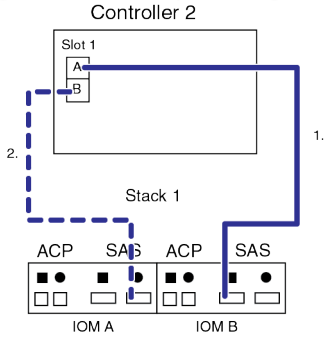

Single-controller-dual-path configuration

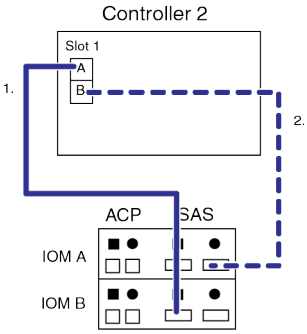

Port pair worksheet and cabling examples for FAS2040 configurations

You can use the completed port pair worksheet and cabling examples to cable FAS2040 single-path HA and single-controller-single-path configurations. Although FAS2040 controllers have only one SAS port—not a port pair—to cable, the cabling rules can still be applied.

Note: The FAS2040 controller's onboard SAS port labeled 0d is treated as slot 0 port a (0a) for cabling purposes. When the onboard port is treated as port 0a, all SAS cabling rules can be applied.

FAS2040 single-path HA with one multi-shelf stack

The following worksheet and cabling examples use port 0a:

	Controller	Port pairs								Cable to (the stack's)	
		Stacks (1-8)									
		1	2	3	4	5	6	7	8		
A and C ports	Controller 1	0a								First shelf	IOM A ■
	Controller 2										IOM B ■
B and D ports	Controller 1									Last shelf	IOM B ●
	Controller 2										IOM A ●

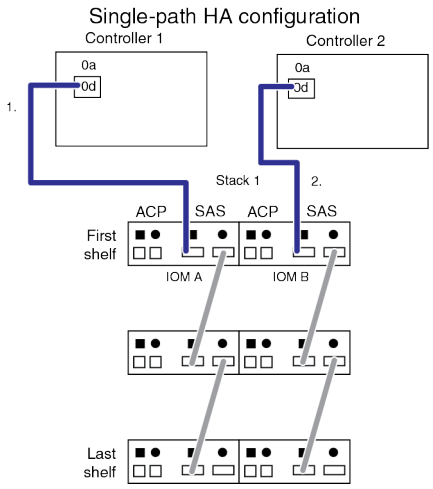

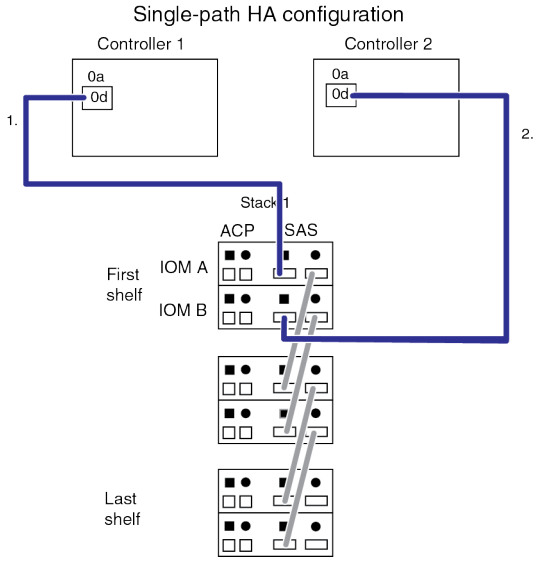

FAS2040 single-controller-single-path with one multi-shelf stack

The following worksheet and cabling examples use port 0a:

Note: For single-controller FAS20xx configurations, the controller is in Slot B (the bottom slot); therefore, the controller is cabled as if it were Controller 2. If a second controller is added to make this an HA pair configuration, the new controller is cabled as Controller 1.

	Controller	Port pairs								Cable to (the stack's)	
		Stacks (1-8)									
		1	2	3	4	5	6	7	8		
A and C ports	~~Controller 1~~	0a								First shelf	~~IOM A ■~~
	Controller 2										IOM B ■
B and D ports	Controller 1									Last shelf	IOM B ●
	Controller 2										IOM A ●

Single-controller-single-path configuration

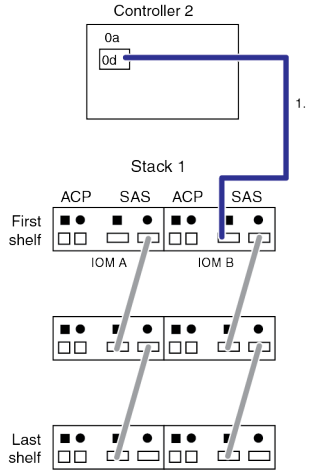

Single-controller-single-path configuration

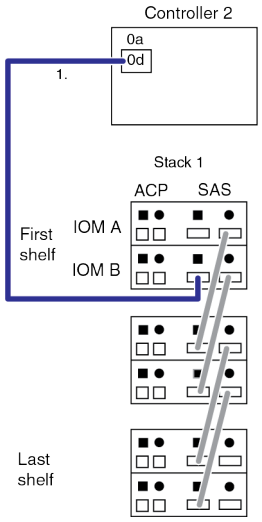

SAS port pair worksheet template

If the section “SAS port pair worksheet and cabling examples for common configurations” does not have a completed worksheet for your HA pair or single-controller configuration, complete this worksheet template to define the port pairs that you can use to cable the controller-to-stack connections.

About this task

- The worksheet template allows for up to eight stacks; you need to add more columns if your configuration has more than eight stacks.
- This procedure uses an HA pair configuration with three quad-port HBAs and three stacks of disk shelves as an example for how to fill in the port pair worksheet template.

	Controller	Port pairs								Cable to (the stack's)	
		Stacks (1-8)									
		1	2	3	4	5	6	7	8		
A and C ports	Controller 1									First shelf	IOM A ■
	Controller 2										IOM B ■
B and D ports	Controller 1									Last shelf	IOM B ●
	Controller 2										IOM A ●

Steps

1. List all SAS A ports on your system, and then all SAS C ports on your system in sequence of slots (0,1, 2, 3, and so on).

   You list one port in each column (Stacks 1-8) in the top row.

   Example

   If you had an HA pair configuration with three quad-port HBAs, you would list the ports as, 1a, 2a, 3a, 1c, 2c, 3c. This would fill columns 1 through 6.

   If you are not familiar with the controller slot numbering convention used in the SAS cabling rules, see the “Controller slot numbering convention used in this document” section.

2. List all SAS B ports on your system, and then all SAS D ports on your system in sequence of slots (0,1, 2, 3 and so on).

   Write this information in the gray boxes.

   Example

   If you had an HA pair configuration with three quad-port HBAs, you would list the ports as, 1b, 2b, 3b, 1d, 2d, 3d. This would fill columns 1 through 6.

3. Rewrite the D and B port list so that the first port in the list is moved to the end of the list.

   Write this information in the boxes below the gray boxes.

Example

If you had an HA pair configuration with three quad-port HBAs, you would rewrite the port list as, 2b, 3b, 1d, 2d, 3d, 1b. This would fill columns 1 through 6.

You have identified the port pairs (six) that are available to cable to the stacks in your system: 1a/2b, 2a/3b, 3a/1d, 1c/2d, 2c/3d, 3c/1b.

4. Circle the port pairs that you want to use to cable to stack 1, stack 2, stack 3, and so on.

You can use the port pairs in sequential order as listed in the worksheet. The following example shows that the first three port pairs (1a/2b, 2a/3b, 3a/1d) will be used to cable the controllers to the three stacks of disk shelves:

	Controller	Port pairs								Cable to (the stack's)	
		Stacks (1-8)									
		1	2	3	4	5	6	7	8		
A and C ports	Controller 1	1a	2a	3a	1c	2c	3c			First shelf	IOM A ■
	Controller 2										IOM B ■
B and D ports	Controller 1	~~1b~~	~~2b~~	~~3b~~	~~1d~~	~~2d~~	~~3d~~			Last shelf	IOM B ●
	Controller 2	2b	3b	1d	2d	3d	1b				IOM A ●

You also have the option to skip port pairs—not use them in sequential order. The following example shows that port pairs were skipped so that every other port pair (1a/2b, 3a/1d, 2c/3d) will be used to cable the controllers to the three stacks of disk shelves:

	Controller	Port pairs								Cable to (the stack's)	
		Stacks (1-8)									
		1	~~2~~ 4	~~3~~ 2	~~4~~ 5	~~5~~ 3	6	7	8		
A and C ports	Controller 1	1a	2a	3a	1c	2c	3c			First shelf	IOM A ■
	Controller 2										IOM B ■
B and D ports	Controller 1	~~1b~~	~~2b~~	~~3b~~	~~1d~~	~~2d~~	~~3d~~			Last shelf	IOM B ●
	Controller 2	2b	3b	1d	2d	3d	1b				IOM A ●

5. As applicable, go to the "How to read a port pair worksheet to cable controller-to-stack connections" section or to the "Cabling the disk shelves in a new HA pair or single-controller configuration" section.

How to read a port pair worksheet to cable controller-to-stack connections

You can use this example to guide you through a completed port pair worksheet so that you understand exactly how to apply the information to cable controller-to-stack connections in an HA pair or single-controller configuration.

About this task

- The following example shows a multipath HA configuration with three quad-port HBAs on each controller and three stacks of disk shelves:

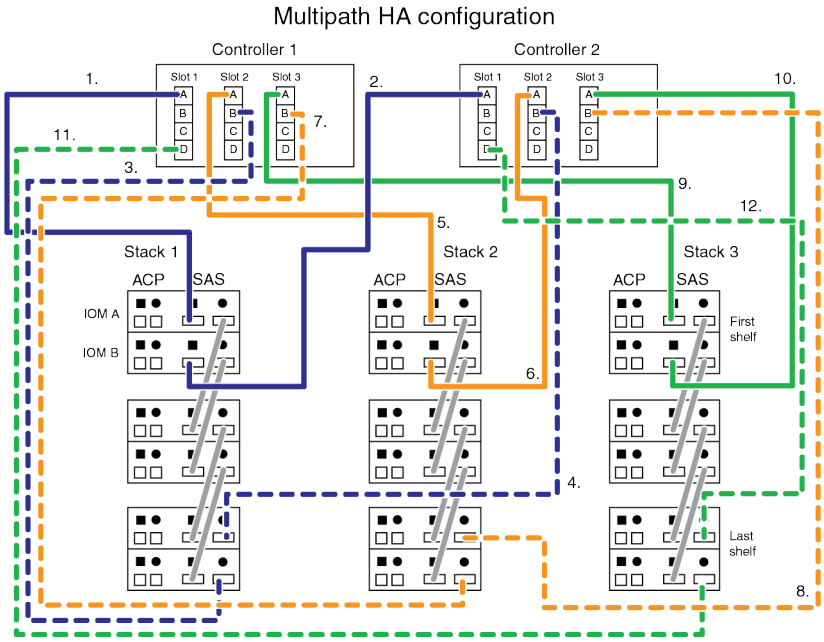

- The following worksheet was used to cable this configuration.
  The port pairs are cabled in sequence as defined in the worksheet: 1a/2b, 2a/3b, 3a/1d.

	Controller	Port pairs								Cable to (the stack's)	
		Stacks (1-8)									
		1	2	3	4	5	6	7	8		
A and C ports	Controller 1	1a	2a	3a	1c	2c	3c			First shelf	IOM A ■
	Controller 2										IOM B ■
B and D ports	Controller 1	~~1b~~	~~2b~~	~~3b~~	~~1d~~	~~2d~~	~~3d~~			Last shelf	IOM B ●
	Controller 2	2b	3b	1d	2d	3d	1b				IOM A ●

Steps

1. Cable port pair 1a/2b on each controller:

   a. Cable controller 1 port 1a to stack 1, first shelf IOM A square port.

   b. Cable controller 2 port 1a to stack 1, first shelf IOM B square port.
   c. Cable controller 1 port 2b to stack 1, last shelf IOM B circle port.
   d. Cable controller 2 port 2b to stack 1, last shelf IOM A circle port.

2. Cable port pair 2a/3b on each controller:

   a. Cable controller 1 port 2a to stack 2, first shelf IOM A square port.
   b. Cable controller 2 port 2a to stack 2, first shelf IOM B square port.
   c. Cable controller 1 port 3b to stack 2, last shelf IOM B circle port.
   d. Cable controller 2 port 3b to stack 2, last shelf IOM A circle port.

3. Cable port pair 3a/1d on each controller:

   a. Cable controller 1 port 3a to stack 3, first shelf IOM A square port.
   b. Cable controller 2 port 3a to stack 3, first shelf IOM B square port.
   c. Cable controller 1 port 1d to stack 3, last shelf IOM B circle port.
   d. Cable controller 2 port 1d to stack 3, last shelf IOM A circle port.

ACP cabling rules

You can cable Alternative Control Path (ACP) connections on an HA pair or a single-controller configuration by applying the ACP cabling rules.

- You must use CAT6 Ethernet cables with RJ-45 connectors for ACP connections.
  You can use non-NetApp CAT6 Ethernet cables. ACP is supported up to 100 meters—the maximum physical length of Ethernet cable.
- For PCM systems with no external storage, there is only one ACP connection.
  Each controller is connected to the partner controller through a dedicated wrench icon.
- All ACP connections to external storage are cabled to the ACP ports, which are designated by either a square or circle symbol.
- ACP connectivity for external storage includes serval types of connections, which differ depending on the number of disk shelves and stacks in your configuration:

  Note: Examples of the following ACP connections are in the *ACP cabling examples* section.

  - **Shelf-to-shelf connections**
    If there is more than one disk shelf in a stack, the disk shelves are daisy-chained.
    IOM A circle port is connected to the next IOM A square port. IOM B circle port is connected to the next IOM B square port.
  - **Intrastack connections**
    - If there is more than one disk shelf in a stack, the last disk shelf and first disk shelf in the stack are connected.
      The last shelf IOM A circle port is connected to the first shelf IOM B square port.
    - If there is only one disk shelf in a stack, the IOMs of the disk shelf are connected.
      The IOM A circle port is connected to the IOM B square port.
  - **Stack-to-stack connections**
    If there are two or more stacks of disk shelves, the last shelf in a stack is connected to the first shelf of the next stack, until all stacks are connected.
    Controller 1 always connects to the first shelf IOM A square port in a stack. Controller 2 always connects to the last shelf IOM B circle port in a stack.
  - **Controller-to-stack connections**
    Each controller is connected to each stack of disk shelves through a dedicated Ethernet port.
    Controller 1 always connects to the first shelf IOM A square port in a stack. Controller 2 always connects to the last shelf IOM B circle port in a stack.
- For single-controller FAS20xx configurations, the controller is in Slot B (the bottom slot); therefore, the controller is cabled as controller 2. If a second controller is added to make this an HA pair, the new controller is cabled as controller 1.
- The ACP cables are color-coded to correspond to the type of ACP connection:

ACP Color Key		
Cable Color		Connection Type
	Black	Shelf-to-shelf
	Yellow	Intrastack
	Purple	Stack-to-stack
	Light blue	Controller-to-stack
	Red	Controller-to-controller for PCM systems with no external storage

ACP cabling

After you cable the SAS connections, you have the option to cable the Alternative Control Path (ACP) connections. You should use the ACP protocol because it enables Data ONTAP to manage and control the SAS disk shelf storage subsystem.

Cabling ACP in an HA pair or single-controller configuration with external SAS storage

Cabling ACP connections on an new HA pair or single-controller configuration with external SAS disk shelves can include cabling shelf-to-shelf connections, intrastack connections, stack-to-stack connections, controller-to-stack connections, and controller-to-controller connections.

Before you begin

If you are using a four-port Ethernet card, the card must already be installed and available in each controller.

About this task

- This procedure assumes you have been directed here from the procedure *Cabling disk shelves in a new HA pair or single-controller configuration*.
- If your controllers do not have a native onboard ACP port, which is designated as the e0P/locked wrench port, you must designate a network interface for each controller at system setup.
- You use CAT6 Ethernet cables with RJ-45 connectors, which can be non-NetApp cables.
- Two examples are shown for each configuration type. One example shows disk shelves with the IOMs arranged side by side, similar to how a DS2246 disk shelf is oriented. The second example shows disk shelves with the IOMs arranged one above the other, similar to how a DS4246 or DS4243 disk shelf is oriented.

Steps

1. If you have more than one disk shelf in a stack, cable your shelf-to-shelf ACP connections; otherwise, go to Step 2.
   a. Connect each shelf IOM A circle port to the next shelf IOM A square port until all shelves in each stack are connected.
   b. Connect each shelf IOM B circle port to the next shelf IOM B square port until all shelves in each stack are connected.

Example

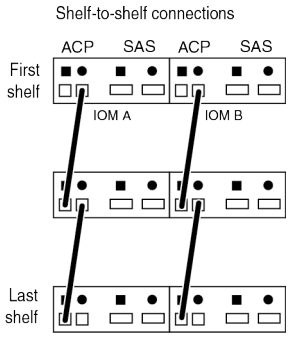

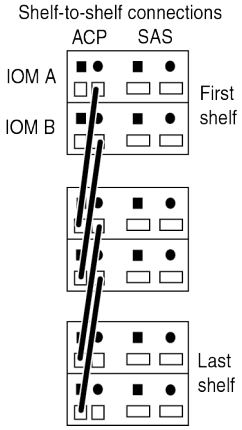

2. Cable the intrastack connection.

If you have...	Then...
More than one disk shelf in a stack of disk shelves	Connect the last shelf IOM A circle port to the first shelf IOM B square port and repeat for all stacks. 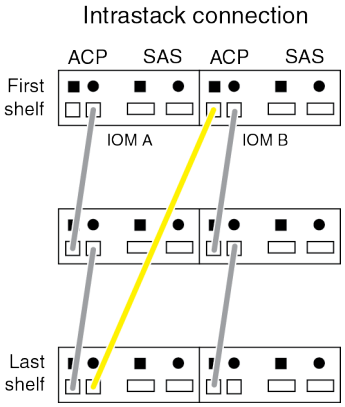 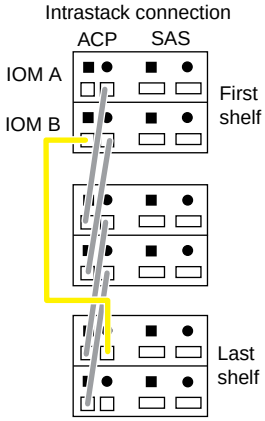
Only one disk shelf in a stack of disk shelves	Connect the IOMs within the disk shelf by connecting the IOM A circle port to the IOM B square of the disk shelf. 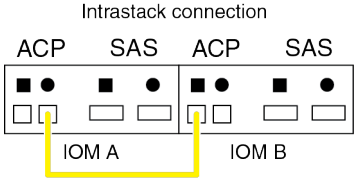 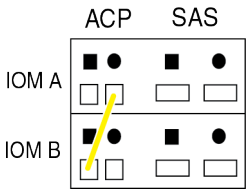

3. If you have more than one stack of disk shelves, cable the stack-to-stack connections; otherwise, go to Step 4.

   a. Beginning with Stack 1, connect the last shelf IOM B circle port to the next stack's first shelf IOM A square port.

   Example

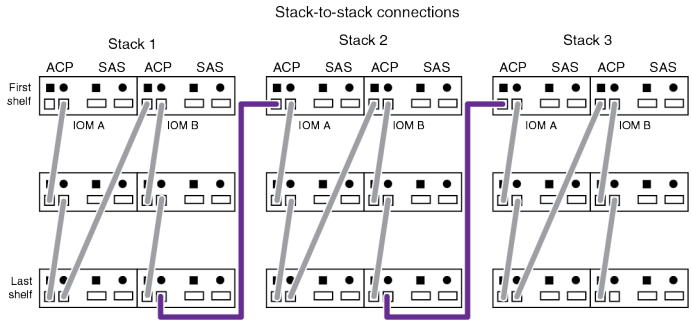

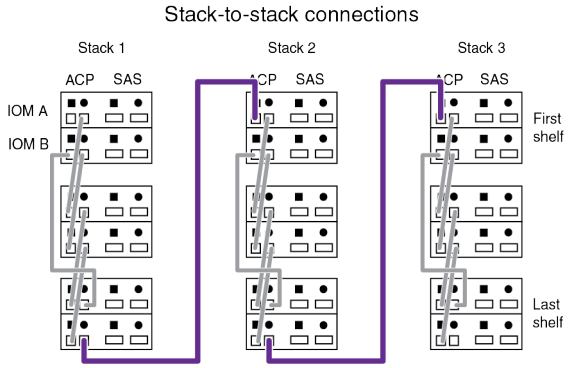

b. Repeat Substep 3a until all stacks are connected.

4. Cable controller-to-stack connections.

If your configuration has...	Then...
Controller 1	Cable controller 1 to the first stack-first shelf IOM A square port.
Controller 2	Cable controller 2 to the last stack-last shelf IOM B circle port.

Example

An HA pair with two stacks of disk shelves has the controller-to-stack connections cabled as follows:

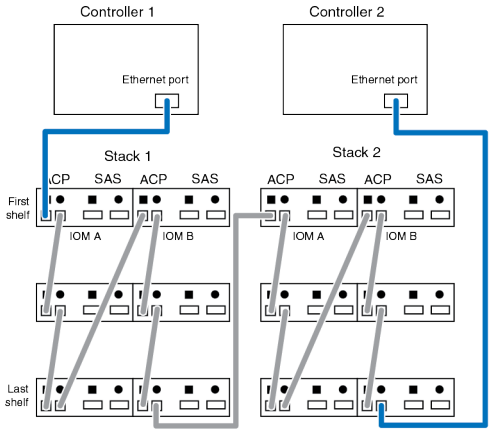

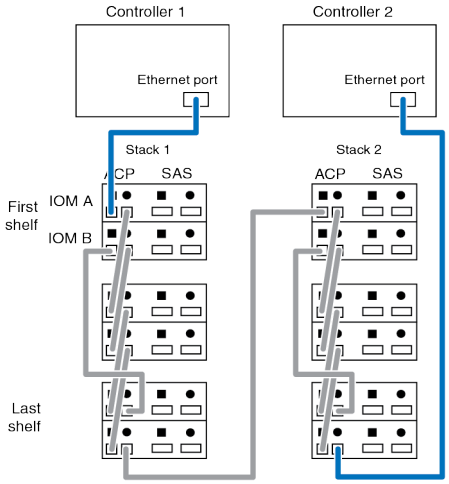

5. Verify that the ACP cabling is correct by entering the applicable command:
   - For 7-Mode, enter the following command from the system console:

     `storage show acp`

     If you have an HA pair, run this command on both nodes.
   - For clustered systems, enter the following command from the clustershell:

     `run -node local -command "storage show acp"`
6. The next step depends on what the command output is for each node.

If the result in the output shows ACP connectivity status...	Then...
Full Connectivity	ACP cabling is correct. The number of shelf IOMs detected out-of-band (through ACP) and in-band (through SAS) are the same.
No Connectivity	Repeat Step 4. No ACP ports on the shelf IOMs are connected to the storage controllers.
Partial Connectivity	Repeat Steps 1 through 6 to see which ACP connections were missed. Fewer shelf IOMs are detected out-of-band (through ACP) than in-band (through SAS).
Additional Connectivity	Repeat the *Cabling disk shelves in a new HA pair or single-controller configuration* procedure to see which SAS connections were missed. More shelf IOMs are detected out-of-band (through ACP) than in-band (through SAS).

7. Return to the procedure *Cabling disk shelves in a new HA pair or single-controller configuration* to complete the remaining steps.

Cabling ACP on PCM systems with no external SAS storage

Cabling your HA pair PCM systems with internal SAS storage for ACP involves one connection between the two controller modules.

Steps

1. Cable the locked-wrench ACP port on one controller module to the same port on the partner controller module.

   #### Example

   The following example shows a side-by-side PCM system like the FAS2220 followed by a stacked-PCM system like the FAS2240-4.

   FAS2220 HA pair with no external disk shelves

   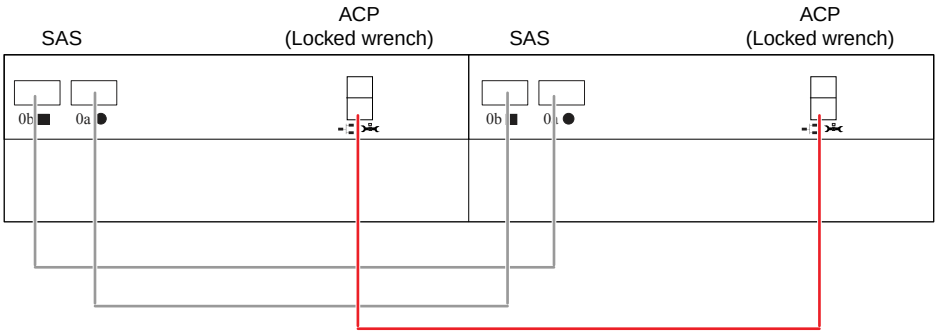

   FAS2240-4 HA pair with no external disk shelves

   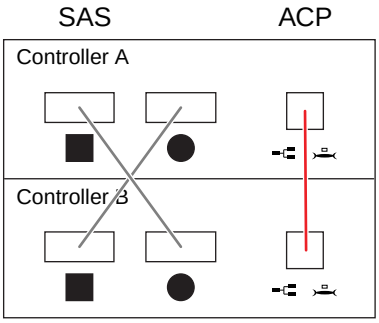

2. Complete system setup and power on the system as instructed in the *Installation and Setup Instructions* (ISI) that came with your platform, or access the ISI on the NetApp Support Site.

   NetApp Support

ACP cabling examples

You can use the Alternative Control Path (ACP) cabling examples to see how ACP cabling rules are applied for common HA pair and single-controller configurations with external storage.

Examples of ACP cabling for HA pairs

You can use examples as a reference when cabling the ACP ports for HA pairs with external storage.

Two examples are shown for each configuration type. One example shows disk shelves with the IOMs arranged side by side, similar to how a DS2246 disk shelf is oriented. The second example shows disk shelves with the IOMs arranged one above the other, similar to how a DS4246 or DS4243 disk shelf is oriented.

HA pair with one disk shelf

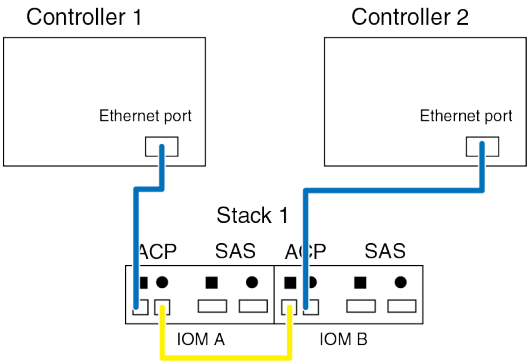

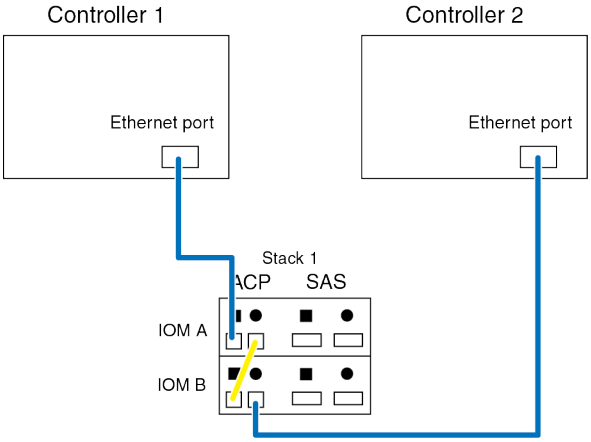

HA pair with two stacks of disk shelves

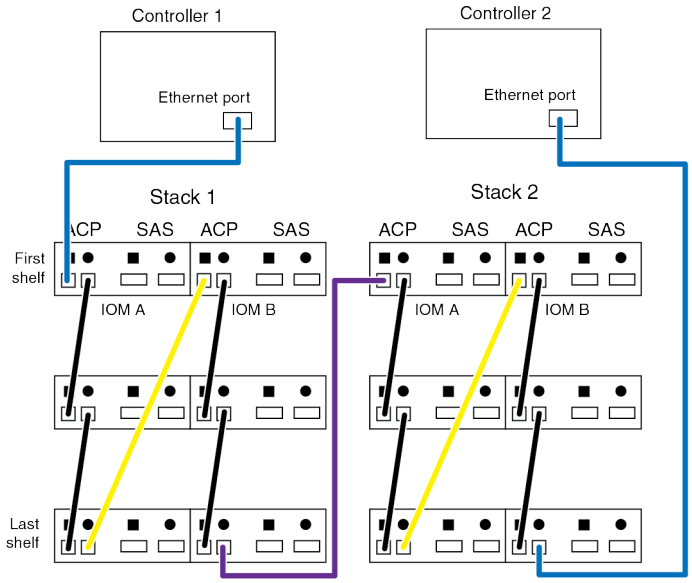

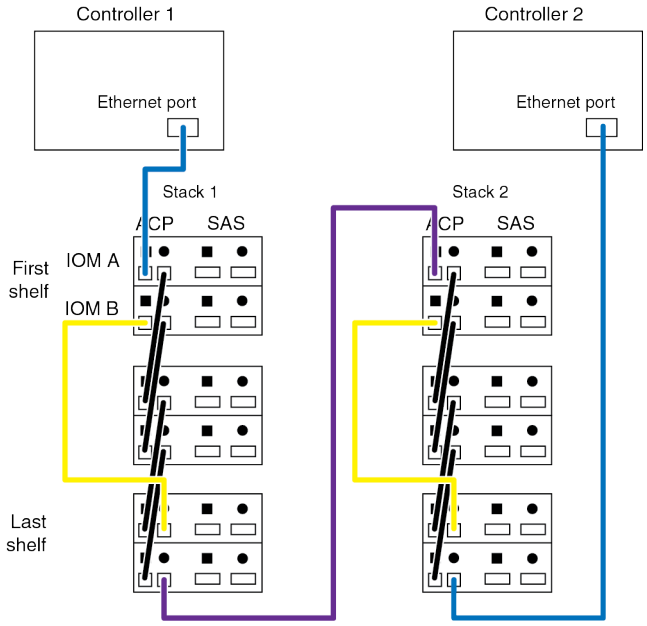

HA pair with three stacks of disk shelves

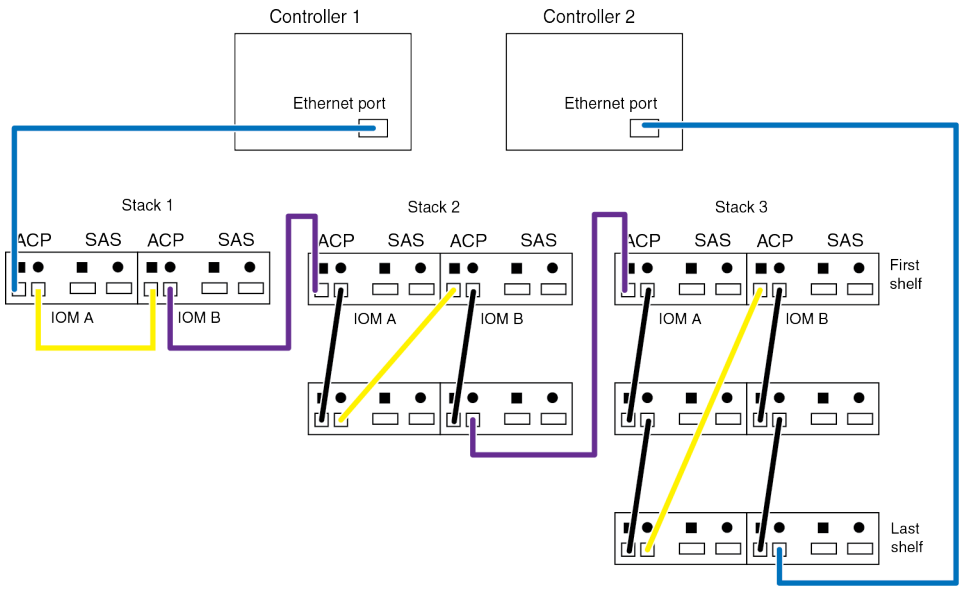

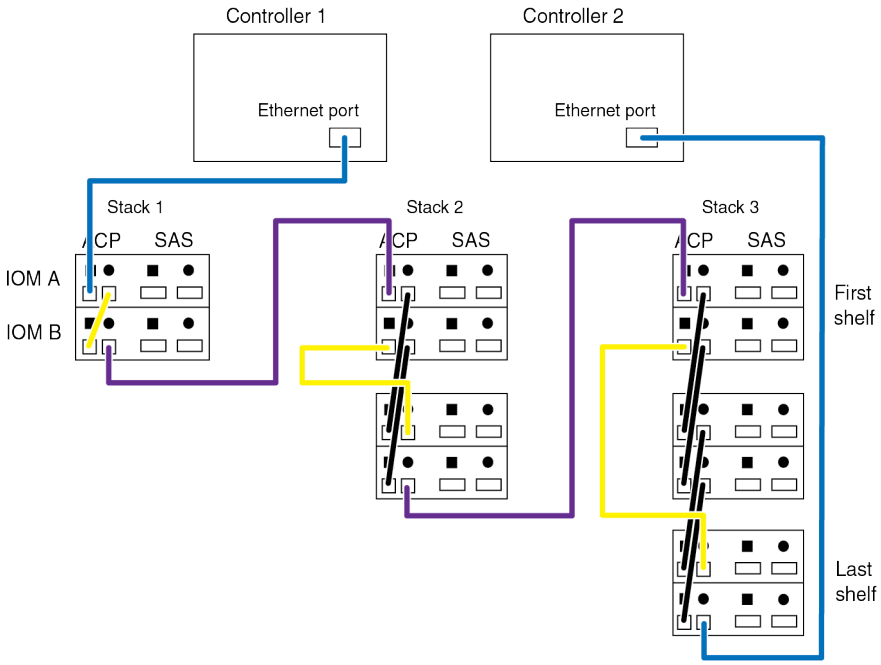

Examples of ACP cabling for single-controller configurations

You can use examples as a reference when cabling the ACP ports for single-controller configurations.

Two examples are shown for each configuration type. One example shows disk shelves with the IOMs arranged side by side, similar to how a DS2246 disk shelf is oriented. The second example shows disk shelves with the IOMs arranged one above the other, similar to how a DS4246 or DS4243 disk shelf is oriented.

ACP cabling examples for all single-controller configurations except FAS20xx systems

You can use the examples as a reference when cabling the ACP ports for all single-controller configurations, except FAS20xx systems. The controller is located in the top slot (referred to as Controller 1); therefore, the controller connects to the stack of shelves through the first shelf in the stack.

Single-controller configuration with one stack of disk shelves (except FAS20xx systems)

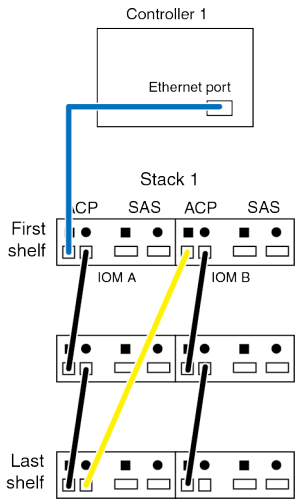

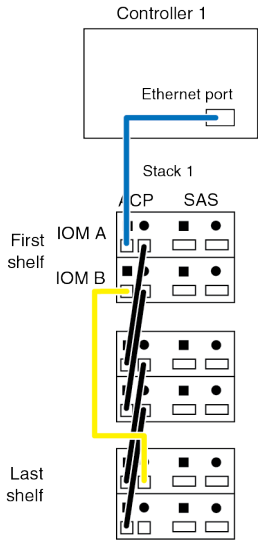

Single-controller configuration with two stacks of disk shelves (except FAS20xx systems)

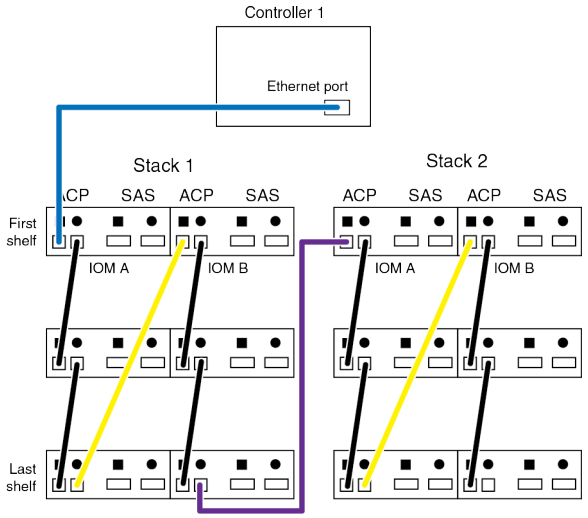

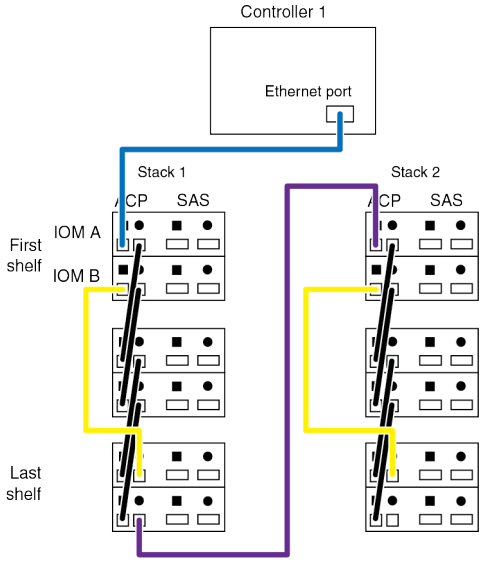

ACP cabling examples for single-controller FAS20xx systems

You can use the examples as a reference when cabling the ACP ports for single-controller FAS20xx systems. For single-controller FAS20xx systems, the controller is located in the bottom slot (referred to as Controller 2/B); therefore, the controller connects to the stack of shelves through the last shelf in the stack.

Single-controller FAS20xx systems with one stack of disk shelves

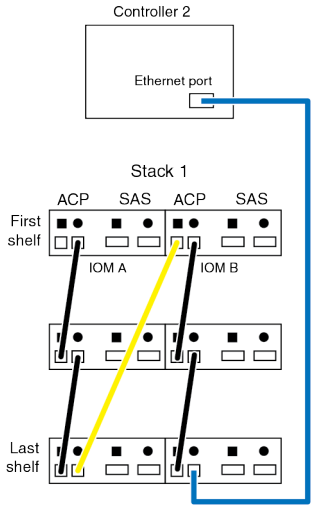

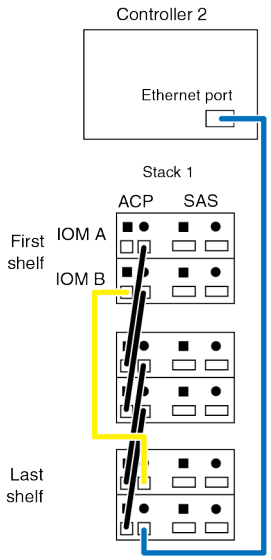

Single-controller FAS20xx systems with two stacks of disk shelves

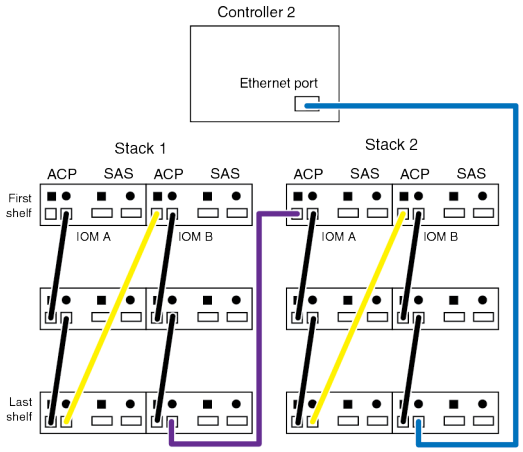

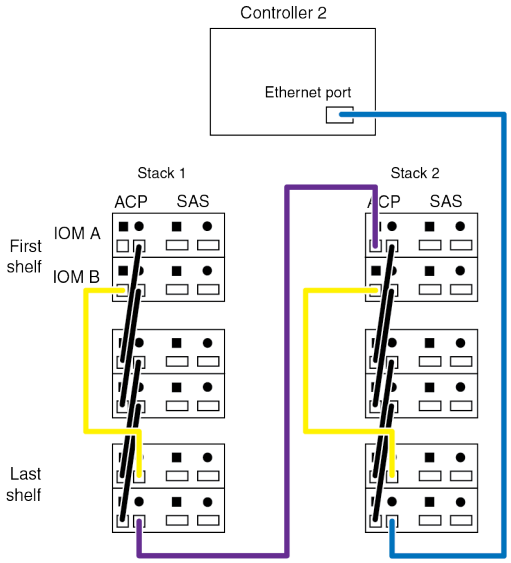
Controller 2
Ethernet port
Stack 1
Stack 2
ACP
SAS
ACP
SAS
IOM A
First shelf
IOM B
Last shelf

Glossary

SAS disk shelf and connectivity terminology is defined in the glossary.

ACP

Alternate Control Path. A protocol that enables Data ONTAP to manage and control the disk shelf storage subsystem. It uses a separate network from the data path, so management communication is not dependent on the data path being intact and available. Use of ACP requires that all disk shelf IOMs and storage controllers connect through the ACP ports on the IOMs and the designated network interface on each controller.

add-on disk shelf

In a SAS disk shelf environment, a disk shelf that is shipped individually—not shipped as part of a configured storage system.

configured system

In a SAS disk shelf environment, a new storage system that ships with SAS disk shelves and preinstalled SAS HBAs (if applicable).

controller

The component of a storage system that runs the Data ONTAP operating system and controls its disk subsystem. The controller located in the top slot in a storage system chassis can be referred to as *Controller 1* or *Controller A*. The controller located in the bottom slot in the storage system chassis can be referred to as *Controller 2* or *Controller B*.

Controllers are also sometimes called *storage controllers*, *storage appliances*, *appliances*, *storage engines*, *heads*, *CPU modules*, or *controller modules*.

dual-path

A configuration in which a single-controller storage system has two ways to connect to a disk drive. This is the supported configuration for a single-controller configuration.

first shelf connection

In a SAS disk shelf environment, the cabling connection from the controller to the first disk shelf in a stack of disk shelves.

IOM

The SAS shelf I/O module that is located in the back of the disk shelf. It connects the individual disk drives to the rest of the storage system and controls the disk shelf operator display panel LEDs. Each disk shelf has two IOMs: IOM A and IOM B. These are also referred to as *SBB A* and *SBB B* on the slot map label on the back of the disk shelf.

last shelf connection

In a SAS disk shelf environment, the cabling connection from the controller to the last disk shelf in a stack of disk shelves.

multipath HA

In an HA pair, a configuration in which each controller has multiple ways to connect to a disk drive. Multipath HA cabling is the most resilient and only supported configuration for HA pairs. This is because it takes full advantage of the resiliency capability of the disk shelves, which means that the node continues to have access to disk drives in the event of cable, HBA, or shelf module failure. A single failure of a cable, HBA, or module does not result in a controller failover.

node

The term node can have two specific meanings:

- A single controller that can be deployed stand-alone, in an HA pair, or in an HA pair within a cluster.
- In Protection Manager and Provisioning Manager, the set of storage containers (storage systems, aggregates, volumes, or qtrees) that are assigned to a dataset and are designated either primary data (primary node), secondary data (secondary node), or tertiary data (tertiary node).

QSFP

The standard SAS cabling connector for all NetApp SAS systems. QSFP to QSFP SAS cables are used to daisy-chain SAS disk shelf ports and connect to the quad-port SAS host bus adapter (HBA) or onboard SAS ports. QSFP to mini-SAS cables are used to connect disk shelves to the dual-port mini-SAS HBA.

SAS stack

Also referred to as *stack*. A group of one or more SAS disk shelves connected (daisy-chained) together and connected to the controller through the first disk shelf in the stack and the last disk shelf in the stack (as needed). The maximum number of disk shelves in a stack of disk shelves and the number of disk shelf stacks supported in a configuration are dependent on the type of storage system.

shelf-to-shelf connection

In a SAS disk shelf environment, the cabling connection between disk shelves in a stack of more than one disk shelf. Each disk shelf is daisy-chained through its SAS ports and, if you are using the ACP capability, each disk shelf is also daisy-chained through its ACP ports. Sometimes called *daisy-chain* connection.

single-controller configuration

A storage system having one controller.

single path

A configuration in which a single-controller storage system has one way to connect to a disk drive. This configuration has multiple single points of failure and is not a preferred configuration.

single-path HA

A configuration in which each controller in the HA pair has one way to connect to the disk drive. This means that an IOM or cable failure requires a controller failover.

software-based disk ownership

An ownership scheme used by SAS disk drives to store ownership information on the disk drive rather than having it be determined by the topology of the storage system's physical connections. It provides increased flexibility and control over disk drive use than hardware-based disk ownership.

square and circle symbols

The SAS ports and ACP ports on the disk shelf IOMs are designated by square and circle symbols. All cabling is done in reference to connecting to a square port or a circle port.

SAS connectivity does not use the concept of In ports and Out ports.

storage system

The hardware device running Data ONTAP that receives data from and sends data to native disk shelves, storage arrays, or both. Storage systems include a controller component and an internal or external disk storage subsystem component. Storage systems are sometimes referred to as *filers*, *appliances*, *storage appliances*, V-Series systems, Data ONTAP systems, or *systems*.

Document update record

When updates are made to this document, they are logged for your reference.

Feature updates	Feature release date
• Updated “About this task” sections in several procedures to include recommendations for cable minimum bend radius and use of Velcro-ties for bundling cables. • Reorganized and updated the “Controller-to-stack SAS connection rules” section for better clarity. • Updated the “SAS port pair worksheet template” section for better clarity. • Updated the following sections to explain that for single-controller platform controller module (PCM) configurations, it is especially important to follow the cabling rules so that port 0a (the embedded storage port), which is domain specific, connects to the correct domain in the stack of disk shelves: ◦ “Controller A and C port connection rules” ◦ “PCM single-controller-dual-path with one multi-shelf stack” ◦ “PCM single-controller-single-path with one multi-shelf stack” • Updated the “SAS disk shelf software-based disk ownership rule” section for better clarity.	April 2016

Feature updates	Feature release date
• Updated and reorganized content to be more streamlined, concise, and user friendly: ◦ Included rules about the use of port pairs. ◦ Improved the port pair worksheet template. ◦ Included completed port pair worksheets to accompany cabling illustrations. ◦ Updated cabling examples to use color coding. ◦ Rewrote the cabling procedure for new storage systems, now called "Cabling disk shelves in a new HA pair or single-controller configuration". This procedure includes shelf power on and checking shelf ID steps, which had been part of the "Installing SAS disk shelves in a new HA pair or single-controller configuration" procedure in the *DS4243, DS2246, DS4486, and DS4246 Disk Shelf Installation and Service Guide*. This procedure was modified to coincide with the steps in the platform *Installation and Setup Instructions* that ship with new platforms. (You are instructed to power on disk shelves and check IDs after cabling SAS and ACP connections, instead of before.) • Included information about the option to skip port pairs (in a worksheet) to leverage different SAS ports on a controller. Previously, rules stated that port pairs should be used in sequence as listed in a worksheet. • Included information for the80xx series. • Included information for the FAS25xx series.	January 2015
• Included information about SAS optical cables in the "SAS cabling rules" section and "Cabling SAS ports" procedure. • In "The general SAS cabling rules" section for HA pairs, the second bullet applies to FAS22xx (instead of only FAS2240). • Removed the reference to the *FAS32xx Series System Cabling Examples* document because it contained incorrect cabling information. • Added a link to the Customer Communiqué CPC-1307-02, *SAS Cabling Update for the FAS3200 Series Storage Controller*, which explains that the 32xx cabling in this *Universal SAS and ACP Cabling Guide* guide is correct and gives guidance for systems that are cabled incorrectly.	September 2013

Feature updates	**Feature release date**
• Updated the rules and exceptions for FAS22xx systems. • References to the “top” and “bottom” shelves in a stack of disk shelves are now “first” and “last”. • Cabling examples now include a version that shows shelves with the IOMs arranged one above the other, similar to how DS4243 disk shelves are oriented. • Added 32xx cabling examples. • Improved the SAS cabling worksheet and added information to assist in filling in the worksheet.	June 2012
Updated with rules and exceptions for FAS2240-2 systems.	November 2011
• Initial release of the SAS and ACP cabling information as a stand-alone document and updates. • The SAS disk shelf illustrations are now generic so that they apply to any NetApp SAS disk shelf. A generic disk shelf is shown as two IOMs side-by-side (no power supplies are shown). • HBAs (1, 2, 3, and so on) are now referred to as *slots* (1, 2, 3, and so on) • Introduces the new rule for referring to onboard SAS ports as belonging to slot 0 and the FAS2040 system exception—the single onboard port is 0a. • Introduces the new rule that for single-controller FAS20xx systems, the controller is in Slot B (the bottom slot); therefore, the controller is cabled as if it were controller 2/B. If a second controller is added to make this an HA pair configuration, the new controller is cabled as controller 1/A. • The term “active/active” is updated to “HA pair” throughout. • The term *Multipath* is updated to *Multipath HA*.	September 2010
Initial release of the SAS and ACP cabling information as part of the DS4243 Installation and Service Guide.	September 2009

Copyright information

Copyright © 1994–2016 NetApp, Inc. All rights reserved. Printed in the U.S.

No part of this document covered by copyright may be reproduced in any form or by any means—graphic, electronic, or mechanical, including photocopying, recording, taping, or storage in an electronic retrieval system—without prior written permission of the copyright owner.

Software derived from copyrighted NetApp material is subject to the following license and disclaimer:

THIS SOFTWARE IS PROVIDED BY NETAPP "AS IS" AND WITHOUT ANY EXPRESS OR IMPLIED WARRANTIES, INCLUDING, BUT NOT LIMITED TO, THE IMPLIED WARRANTIES OF MERCHANTABILITY AND FITNESS FOR A PARTICULAR PURPOSE, WHICH ARE HEREBY DISCLAIMED. IN NO EVENT SHALL NETAPP BE LIABLE FOR ANY DIRECT, INDIRECT, INCIDENTAL, SPECIAL, EXEMPLARY, OR CONSEQUENTIAL DAMAGES (INCLUDING, BUT NOT LIMITED TO, PROCUREMENT OF SUBSTITUTE GOODS OR SERVICES; LOSS OF USE, DATA, OR PROFITS; OR BUSINESS INTERRUPTION) HOWEVER CAUSED AND ON ANY THEORY OF LIABILITY, WHETHER IN CONTRACT, STRICT LIABILITY, OR TORT (INCLUDING NEGLIGENCE OR OTHERWISE) ARISING IN ANY WAY OUT OF THE USE OF THIS SOFTWARE, EVEN IF ADVISED OF THE POSSIBILITY OF SUCH DAMAGE.

NetApp reserves the right to change any products described herein at any time, and without notice. NetApp assumes no responsibility or liability arising from the use of products described herein, except as expressly agreed to in writing by NetApp. The use or purchase of this product does not convey a license under any patent rights, trademark rights, or any other intellectual property rights of NetApp.

The product described in this manual may be protected by one or more U.S. patents, foreign patents, or pending applications.

RESTRICTED RIGHTS LEGEND: Use, duplication, or disclosure by the government is subject to restrictions as set forth in subparagraph (c)(1)(ii) of the Rights in Technical Data and Computer Software clause at DFARS 252.277-7103 (October 1988) and FAR 52-227-19 (June 1987).

Trademark information

NetApp, the NetApp logo, Go Further, Faster, AltaVault, ASUP, AutoSupport, Campaign Express, Cloud ONTAP, Clustered Data ONTAP, Customer Fitness, Data ONTAP, DataMotion, Fitness, Flash Accel, Flash Cache, Flash Pool, FlashRay, FlexArray, FlexCache, FlexClone, FlexPod, FlexScale, FlexShare, FlexVol, FPolicy, GetSuccessful, LockVault, Manage ONTAP, Mars, MetroCluster, MultiStore, NetApp Insight, OnCommand, ONTAP, ONTAPI, RAID DP, RAID-TEC, SANtricity, SecureShare, Simplicity, Simulate ONTAP, Snap Creator, SnapCenter, SnapCopy, SnapDrive, SnapIntegrator, SnapLock, SnapManager, SnapMirror, SnapMover, SnapProtect, SnapRestore, Snapshot, SnapValidator, SnapVault, StorageGRID, Tech OnTap, Unbound Cloud, and WAFL and other names are trademarks or registered trademarks of NetApp, Inc., in the United States, and/or other countries. All other brands or products are trademarks or registered trademarks of their respective holders and should be treated as such. A current list of NetApp trademarks is available on the web.

http://www.netapp.com/us/legal/netapptmlist.aspx

How to send comments about documentation and receive update notifications

You can help us to improve the quality of our documentation by sending us your feedback. You can receive automatic notification when production-level (GA/FCS) documentation is initially released or important changes are made to existing production-level documents.

If you have suggestions for improving this document, send us your comments by email.

doccomments@netapp.com

To help us direct your comments to the correct division, include in the subject line the product name, version, and operating system.

If you want to be notified automatically when production-level documentation is released or important changes are made to existing production-level documents, follow Twitter account @NetAppDoc.

You can also contact us in the following ways:

- NetApp, Inc., 495 East Java Drive, Sunnyvale, CA 94089 U.S.
- Telephone: +1 (408) 822-6000
- Fax: +1 (408) 822-4501
- Support telephone: +1 (888) 463-8277

Index

A

ACP cabling
for external SAS storage *56*
on PBM systems with no external storage *65*
ACP cabling examples
for HA pairs *62*
for single-controller configurations except FAS20xx systems *65*
for single-controller FAS20xx systems *66*
ACP cabling rules
for HA pair configurations *54*
for single-controller configurations *54*
ACP connections
cabling *13*

C

cabling
ACP connections *13*
ACP on external SAS storage *56*
considerations for cabling disk shelves in a new HA pair or single-controller configuration *13*
disk shelves *13*
examples and worksheet for PCM configurations *38*
examples for port pairs *17*
for 32xx or 8020 *30*
for FAS2040 configurations *47*
for FAS2050 configurations *43*
for single-controller-dual-path configurations with quad-port SAS HBAs *26*
illustrations of *26*, *30*, *34*, *43*, *47*
requirements for cabling disk shelves in a new HA pair or single-controller configuration *12*
rules *5*
SAS connections *13*
cabling ACP
on FAS22xx HA pairs with no external SAS storage *61*
cabling examples
ACP cabling for single-controller configurations except FAS20xx systems *65*
ACP cabling for single-controller FAS20xx systems *66*
SAS cabling for 32xx or 8020 *30*
SAS cabling for FAS2040 configurations *47*
SAS cabling for FAS2050 configurations *43*
SAS cabling for FAS80xx configurations *34*
SAS cabling for multipath HA configurations with quad-port SAS HBAs *18*
SAS cabling for single-controller-dual-path configurations with quad-port SAS HBAs *26*
cabling rules, SAS
controller-to-stack *7*
shelf-to-shelf *6*
cabling, port pair
examples for PCM configurations *38*
comments
how to send feedback about documentation *76*
configuration rules *5*
configurations
considerations for cabling disk shelves in new HA pair or single-controller *13*
requirements for cabling disk shelves in new HA pair or single-controller *12*
configurations, PCM
port pair worksheet and cabling examples *38*
connection rules, SAS
controller-to-stack *7*
shelf-to-shelf *6*
controller port pairs
identifying *13*
controller slot numbering rules
examples of *6*
explanation of *6*
controllers
SAS connection rules to stacks *7*

D

disk ownership
assigning *13*
disk shelf
cabling *12*, *13*
disk shelves
considerations for cabling in a new HA pair or single-controller configuration *13*
requirements for cabling in a new HA pair or single-controller configuration *12*
shelf-to-shelf SAS connection rules *6*
document updates
record of *71*
documentation
how to receive automatic notification of changes to *76*
how to send feedback about *76*

E

examples
ACP cabling for HA pairs *62*
ACP cabling for single-controller configurations except FAS20xx systems *65*
ACP cabling for single-controller FAS20xx systems *66*
external SAS storage
cabling ACP *56*

F

feedback
how to send comments about documentation *76*

G

glossary
of SAS shelf and connectivity terms *69*

H

HA pair configurations
rules for configuring *5*
HA pairs
ACP cabling examples *62*
HA pairs, new
considerations for cabling disk shelves in *13*
requirements for cabling disk shelves in *12*

I

information
how to send feedback about improving documentation *76*

M

multipath HA configurations
with quad-port SAS HBAs *18*
multipath HA configurations, PCM
port pair worksheet and cabling examples *38*

N

new HA pairs
considerations for cabling disk shelves in *13*
requirements for cabling disk shelves in *12*

O

optical cables
rules for *10*

P

PCM configurations
port pair worksheet and cabling examples *38*
port pair cabling
examples for PCM configurations *38*
port pair worksheet
how to read it to cable controller-to-stack connections *52*
port pair worksheet examples
for 32xx or 8020 *30*
for cabling FAS2040 configurations *47*
for cabling FAS2050 configurations *43*
for FAS80xx configurations *34*
for single-controller-dual-path configurations with quad-port SAS HBAs *26*
port pair worksheets
examples for PCM configurations *38*
port pairs
worksheet and cabling examples for *17*
port pairs, SAS
worksheet template *50*

R

rules
for configurations *5*
for SAS optical cables *10*
for slot numbering *6*
rules, SAS connection
controller-to-stack *7*
shelf-to-shelf *6*

S

SAS cabling rules
controller-to-stack *7*
purpose of *5*
SAS connection rules
controller-to-stack *7*
shelf-to-shelf *6*
SAS optical cables
rules for *10*
SAS port pairs
worksheet template *50*
SAS terminology
defined *69*
shelf firmware
verifying *13*
shelf IDs
verifying *13*
shelves
considerations for cabling in a new HA pair or single-controller configuration *13*
requirements for cabling in a new HA pair or single-controller configuration *12*
shelf-to-shelf SAS connection rules *6*
single-controller configurations
ACP cabling for single-controller configurations except FAS20xx systems *65*
ACP cabling for single-controller FAS20xx systems *66*
considerations for cabling disk shelves in *13*
requirements for cabling disk shelves in *12*
rules for configuring *5*
single-controller-dual-path configurations
with quad-port SAS HBAs *26*
single-controller-dual-path configurations, PCM
port pair worksheet and cabling examples *38*
single-controller-single-path configurations, PCM
port pair worksheet and cabling examples *38*
stacks
SAS connection rules to controllers *7*
suggestions
how to send feedback about documentation *76*

T

templates, worksheet
SAS port pair *50*
terminology
SAS shelf and connectivity *69*
Twitter
how to receive automatic notification of documentation changes *76*

U

universal SAS cabling method

definition of *5*
updates, document
record of *71*

W

worksheet
examples for port pairs *17*
how to read it to cable controller-to-stack connections *52*
worksheet examples
for multipath HA configurations with quad-port SAS HBAs *18*
worksheet templates
SAS port pair *50*
worksheets
examples and worksheet for PCM configurations *38*
worksheets, port pair
examples for PCM configurations *38*